Bandon-Rogue Transmission Line Rebuild Project

Final Environmental Assessment and Finding of No Significant Impact

May 2011

DOE/EA-1739

This page left intentionally blank.

Bonneville Power Administration

Bandon-Rogue Transmission Line Rebuild Project

Finding of No Significant Impact

May 2011

This page left intentionally blank.

Bandon-Rogue Transmission Line Rebuild Project

DEPARTMENT OF ENERGY
Bonneville Power Administration

Finding of No Significant Impact (FONSI)
and Floodplain Statement of Findings
DOE EA-1739

Summary: Bonneville Power Administration (BPA) announces its environmental findings on the Bandon-Rogue Transmission Line Rebuild Project (Rebuild Project or Proposed Action). The Rebuild Project involves rebuilding the existing Bandon-Rogue 115-kilovolt (kV) transmission line. The 46-mile-long transmission line is located in Coos and Curry counties in Oregon, extending from the city of Bandon to near Nesika Beach.

BPA has prepared an environmental assessment (EA) evaluating the Proposed Action and a No Action Alternative. Based on the analysis in the EA, BPA has determined that the Proposed Action is not a major federal action significantly affecting the quality of the human environment, within the meaning of the National Environmental Policy Act (NEPA) of 1969. Therefore, preparation of an environmental impact statement (EIS) is not required and BPA is issuing this FONSI for the Proposed Action. The Proposed Action is not the type of action that normally requires preparation of an EIS, and the nature of the Proposed Action is not without precedent.

BPA has prepared a Mitigation Action Plan (MAP) that lists all of the mitigation measures that BPA is committed to implementing. The measures in the MAP reflect the measures identified in the Final EA. The MAP is included as Appendix J of the Final EA.

Comments received on the Preliminary EA and responses to those comments are presented in Chapter 8 of the Final EA. Responses to comments and refinements or changes in the Proposed Action resulted in only minor changes to the Preliminary EA. These changes are underlined (text additions) or struck through (deleted text) in the Final EA.

A Floodplain Statement of Findings is also included in this FONSI. Impacts on floodplains and wetlands will be avoided where possible and minimized where there is no practicable alternative.

Public Availability: This FONSI will be mailed directly to interested parties who requested a copy. A notification of availability will be mailed to other potentially affected parties. For copies of this FONSI and Final EA, please call BPA's toll-free document request line: 1-888-276-7790. The documents are also available at the following website: http://efw.bpa.gov/environmental_services/Document_Library/Bandon-Rogue_Rebuild/.

Additional Information: For additional information about the project, please contact the Project Manager, Erich Orth, toll free at 1-800-282-3713, direct phone number 360-619-6559, or email

etorth@bpa.gov. For additional information about the environmental analysis, please contact the Environmental Document Manager, Kimberly St.Hilaire, toll-free at 1-800-282-3713, direct phone number 503-230-5361, or email at krsthilaire@bpa.gov.

Proposed Action: BPA currently owns, operates, and maintains the existing Bandon-Rogue 115-kV transmission line, which is a 46-mile-long transmission line located in Coos and Curry counties, Oregon. The transmission line was originally built in the late 1940s and early 1950s by BPA. BPA needs to take action, because this transmission line is old, physically worn, and structurally unsound in places. The conductor has not been replaced and does not meet current standards. The poor condition of the transmission line creates risks to public and worker safety and could lead to unreliable electrical service.

The Proposed Action is to rebuild the existing 115-kV transmission line in the existing right-of-way, conduct work on some unpaved access roads, and remove some danger trees. The transmission line would continue to operate as a 115-kV line. The proposed schedule is to begin rebuilding the transmission line in June 2011, with some access road work beginning in May 2011. Ongoing stabilization of the work area, monitoring, clean up, and other project-related actions could continue through December, if needed. Details of the Proposed Action are presented in Chapter 2 of the Final EA.

No Action Alternative: The No Action Alternative assumes that BPA would not rebuild the transmission line and would continue to operate and maintain the existing transmission line. Construction activities associated with the Rebuild Project would not occur, and the reliability and safety concerns that prompted the proposal for action would persist.

Because of the deteriorated condition of the existing transmission line, it is likely that more frequent maintenance and more frequent access would be required to maintain it as materials continue to deteriorate and fail over time. Given the poor condition of some of the access roads, it is possible that the access road work proposed under the Rebuild Project would be funded and carried out as a BPA maintenance project in the future, independent of rebuilding the transmission line.

Environmental Consequences: To evaluate potential impacts from construction and from operation and maintenance activities, four impact levels were used—high, moderate, low, and no impact. In addition, some impacts have been identified as beneficial. This impact analysis is detailed in Chapter 3 of the Final EA and is summarized below. High impacts are considered to be significant impacts, whereas moderate and low impacts are not. Direct, indirect, and cumulative impacts were evaluated.

The impact evaluation in Chapter 3 of the Final EA includes required mitigation. As mentioned above, a detailed MAP was developed to list the mitigation measures, components, persons responsible, and implementation schedule for each measure. The MAP includes measures to reduce impacts even when those impacts are not considered significant. Mitigation includes actions that were taken during the design phase to avoid or minimize adverse impacts. It also

includes mitigation measures that will be implemented during preconstruction, construction, and post-construction implementation of the Rebuild Project. Some mitigation measures resulted from collaborative consultation and coordination with stakeholders, while others are best management practices that BPA adopts based on past experience maintaining, building, and operating transmission lines.

The following discussion provides a summary of the Proposed Action's potential impacts and the reasons these impacts would not be significant.

Land Use and Recreation: Impacts on land use and recreation would be low, except for low to moderate impacts on residential land uses, as noted below.

- Construction related disturbance of agricultural and grazing lands would be limited and temporary. Less than 1.0 acre of pasture would be converted to access roads.
- Construction impacts within Humbug Mountain State Park would result from replacement of three structures and work on approximately 1,200 feet of access roads. These activities would not result in the direct loss of recreational facilities or lands.
- Removal of 587 danger trees and the conversion of less than 0.5 acre of forested land to access roads would affect a very small percentage of the overall timber base within the study area.
- Access to residential properties could be temporarily delayed by equipment used for construction and maintenance. Because construction would be within the existing right-of-way and along existing access roads, the level of impact would depend on the proximity of homes to construction work sites.
- Traffic delays from increased construction traffic and temporary single-lane closures are not expected to substantially degrade traffic operation or access to recreational facilities because of their short duration.
- Maintenance activities would cause only brief, temporary interruption of residential and recreational use and traffic on local roads and highways.
- Because of the temporary and localized nature of the Proposed Action, except for the construction of less than 1 mile of new access road construction and the addition of 19 new wood-pole structures, the contribution of the Proposed Action to cumulative impacts on land use would be low.

Visual Quality: Temporary and permanent visual impacts would be low, except for low to moderate impacts on residential land uses, as noted below.

- Construction activities would temporarily detract from the scenic nature of the U.S. Highway 101 (U.S. 101) corridor in a few areas where the transmission line corridor is visible to motorists.

- An increase in the height of most structures and the installation of spiral bird diverters on conductor spanning Floras Creek and the Sixes River would permanently increase the visibility of the transmission line from U.S. 101. The distance between the transmission line corridor and the highway, combined with the relatively small increase in structure height and relatively high traffic speeds of motorists, would reduce the sensitivity of motorists to these impacts.
- Views of construction activities from residences would result in permanent impacts. Transmission line structures would be more visible from some residences due to increased structure height and conductor may be more visible to some residents in several areas due to the installation of spiral bird diverters. These permanent impacts would be low to moderate impact depending on the view of residents and the proximity of homes to the transmission line.
- Temporary views of construction from recreational facilities would be partially screened by the trees and topography and would only be visible in the distance. Views of construction activities by recreational users could temporarily detract from the natural visual environment of the area. The installation of spiral bird diverters on conductor spanning South Twomile Creek would permanently increase the visibility of the transmission line from one golf course.
- Views of maintenance activities would be temporary and localized and would not result in any new or different impacts on visual resources.
- Because of the extremely limited nature of the visual changes resulting from the Rebuild Project, the contribution of the Proposed Action to cumulative impacts on visual resources would be low.

Geology and Soils: Potential impacts on soils would be minimized through implementation of mitigation measures, including best management practices and a Stormwater Pollution and Prevention (SWPP) Plan, which would address measures to reduce erosion and runoff and to stabilize disturbed areas. Impacts on geology and soils would be low to moderate.

- Use of heavy equipment during construction and maintenance would result in soil compaction and soil disturbance that would increase the potential for erosion. Because disturbance would be localized and minimal, it would not significantly increase or permanently alter stormwater runoff with the implementation of best management practices.
- Although unstable landslide areas exist throughout the study area, structures and new access roads would not be constructed in active slide areas.
- With implementation of mitigation measures and best management practices to protect soils and reduce the potential for erosion, the contribution of the Proposed Action to cumulative soil impacts would be low to moderate.

Vegetation: Impacts on vegetation would be low to moderate, with the implementation of mitigation.

- Structure work would remove or temporarily disturb up to 62 acres of vegetation, mostly shrubland and nonnative grasslands with some higher quality plant communities in a few areas, but impacts would be minimized by the restriction of construction work areas to limit disturbance to vegetation.
- Both western lily populations in the study area are near construction areas; they would be protected by fencing. Some on-site and off-site habitat enhancement of western lily populations would result in some beneficial effects on these populations.
- Construction-related ground disturbance and danger tree removal would open up new areas for weed infestation. Impacts from weed spread could be moderate to high without appropriate mitigation. The Weed Management Plan (Appendix D of the Final EA) includes measures that would be implemented to reduce impacts from weeds to moderate levels.
- Use of best management practices to help avoid or limit movement of soils between work areas would help prevent inadvertent spread of the Port-Orford-cedar root disease pathogen.
- Maintenance activities would result in localized vegetation disturbance and danger tree removal, but would help control weeds through ongoing vegetation management activities.
- Although the overall impact of the Proposed Action on vegetation is small, the cumulative impact on vegetation is considered moderate because of the potential to spread noxious weeds.

Waterways and Water Quality: Impacts on waterways and water quality would be low to moderate with implementation of mitigation measures, best management practices, and a SWPP Plan, which would include measures to reduce erosion and runoff, stabilize and reseed disturbed areas, and prevent and contain any accidental spills.

- Construction and maintenance activities that would increase turbidity, such as culvert installation and soil disturbance, would be limited to specific locations. Temporary increases in turbidity would be minimized through the use of mitigation measures and best management practices.
- Construction of properly designed access roads would improve stormwater conveyance by directing the flow of surface water into vegetated areas where water would slowly infiltrate soils. The proper sizing of culverts would accommodate 100-year flows.
- To prevent water contamination from chemical spills, equipment would be cleaned prior to entering waterways for instream work, and equipment refueling and staging of equipment would not be done within 150 feet of water features. A Spill Prevention and Treatment Plan would address prevention of spills and prompt clean-up.

- Increases in stream water temperatures could result from vegetation removal in riparian areas. To mitigate for any increases in water temperature, vegetation removal would be minimized and off-site stream restoration would be conducted along three temperature-impaired waterways (Butte Creek, Willow Creek, and the Elk River).
- Compared with the extent of ground disturbance associated with past and current land uses in the project vicinity, the contribution of the Proposed Action to cumulative water quality impacts would be low

Wetlands: Through careful planning, most impacts on wetlands were avoided. Unavoidable impacts on wetlands would result in low impacts, except for potential impacts from maintenance activities.

- Installation of six structures that currently are located in wetlands would require less than 5 cubic yards of permanent wetland fill.
- Access road work would result in approximately 0.12 acre of permanent wetland fill.
- Construction activities would result in temporary wetland disturbance, including the disturbance of wetland vegetation and compaction of soils, and approximately 0.28 acre of temporary wetland fill. Temporary wetland impacts would not permanently alter wetland hydrology or wetland vegetation.
- Maintenance activities would result in localized impacts on wetlands that would generally be temporary; impacts would be low to moderate, depending on the type of work, quality of wetland, and extent of impacts.
- Wetlands in the project vicinity have been cumulatively affected through destruction and degradation from various land uses. Because the Proposed Action would fill less than 0.5 acre of freshwater wetlands, it would contribute in an extremely minor way to cumulative impacts on wetlands in the project vicinity.

Floodplains: No new project elements (wood-pole structures or access roads) would be constructed in floodplains. Unavoidable impacts on floodplains would be low.

- Impacts within floodplains from removal and replacement of six existing wood-pole structures and work on existing access roads (approximately 0.29 mile), including soil compaction, vegetation removal, and increased sedimentation, would be temporary and localized and conditioned by the use of best management practices to minimize sedimentation. Work within floodplains would only minimally alter floodplain functions and would not alter the existing flood storage capacity.
- Impacts on floodplains from work on existing access roads outside of but within 200 feet of floodplains (approximately 0.8 mile) could result in the deposition of incidental amounts of sediments in floodplains and would not alter floodplain functions.
- The removal of six danger trees near the Johnson Creek floodplain would not result in erosion, because they would be cut with roots left intact.

- Maintenance activities within or near floodplains would deposit incidental amounts of sediment into floodplains.
- Overall, the Proposed Action is not expected to contribute noticeably to cumulative changes in floodplain qualities and function, due to the small area that would be affected.

Fish: Impacts on fish and fish habitat would be low to moderate, with implementation of mitigation and best management practices.

- Installation of fish-passage culverts could cause harm to fish through disturbance, injury, or mortality, but impacts would be minimized through implementation of mitigation and conservation measures required by National Marine Fisheries Service (NMFS) and Oregon Department of Fish and Wildlife (ODFW).
- Culverts that would be installed within fish-bearing streams were designed to meet NMFS and ODFW criteria for fish passage and all culverts would be installed during the ODFW-approved instream work period.
- Construction and maintenance activities could impact fish habitat, if sediments from work areas reach streams. Implementation of mitigation measures, including best management practices, would limit impacts.
- Removal of four danger trees near streams is not likely to affect fish, because the small amount of cover that would be removed would not be expected to increase water temperatures to a level that could affect fish.
- The use of herbicides during ongoing vegetation management could affect water quality in riparian areas, but only herbicides approved for work near water would be used.
- Construction activities and vegetation removal would affect Pacific coast salmon Essential Fish Habitat. With the implementation of mitigation measures, project activities are not likely to reduce the abundance or distribution of coho or Chinook salmon or to adversely modify the ecosystem to the extent that measurable effects on spawning, feeding, or growth to maturity for coho or Chinook salmon would result.
- Rebuild Project activities would not degrade Oregon Coast and Southern Oregon/Northern California Coasts coho salmon designated critical habitat within the study area, with the implementation of mitigation measures.
- The Proposed Action would temporarily contribute in a minor way to the cumulative impacts on fish and fish habitat. However, the Proposed Action could reduce some cumulative impacts through the following beneficial effects: 1) restoration of access to historical fish habitat through the removal of two fish passage barriers, and 2) decreased amount of sediment delivered to streams through improvements to access roads.

Wildlife: Impacts on wildlife from habitat modification, degradation, or loss and disturbance of wildlife would be low to moderate.

- Construction and maintenance activities would result in the temporary loss of vegetation in work areas but the degradation of wildlife habitat would be temporary and would generally occur within areas where vegetation is managed on an ongoing basis.
- Installation of 19 new structures would require construction of less than 1 mile of new unpaved access roads, resulting in a minimal loss of habitat, which is not expected to adversely affect the viability or survival of species at the population level.
- Areas disturbed by construction and maintenance could result in degradation of wildlife habitat, if these areas are invaded by noxious weeds. This potential impact would be mitigated through implementation of weed control activities as described in the Weed Management Plan (Appendix D of this EA). Degradation of habitat below existing conditions is not expected.
- Construction and maintenance activities would result in increased noise and activity levels, which could temporarily displace wildlife near work areas, but disturbance would be temporary and wildlife would be expected to return after work is complete.
- Danger tree removal would not be conducted until after August 15 to minimize displacement of wildlife, including nesting birds.
- Although there are no known problem areas for bird collisions with the transmission line, the potential for bird collisions would be reduced by the installation of spiral bird diverters on conductor spanning areas frequented by birds (Aleutian cackling geese, marbled murrelet and other species), including Twomile Creek, South Twomile Creek, Floras Creek, Crystal Creek, Sixes River, and Elk River.
- Nesting bald eagles would not be affected, because known eagle nests are approximately 1,600 feet from work areas, well beyond the 660-foot buffer recommended by the U.S. Fish and Wildlife Service (USFWS). The Rebuild Project would result in minimal disturbance to bald and golden eagle foraging resources.
- Northern spotted owl and marbled murrelet nesting, roosting, foraging, and dispersal habitat would not be modified under the Proposed Action. Disturbance of nesting northern spotted owl and marbled murrelet would be minimized through implementation of restrictions on the time of work, as agreed upon with USFWS. These species are not expected to permanently abandon the study area and no reduction in the abundance or their distribution is expected.
- The Proposed Action would contribute in a minor way to cumulative impacts on wildlife habitat through temporary disturbance during construction and maintenance and permanent removal of extremely small areas of wildlife habitat.

Cultural Resources: Impacts on cultural resources eligible for the National Register of Historic Places (NRHP) are expected to be low to moderate after mitigation, depending on the level and amount of impact.

- Four existing structures would be replaced and some access road work would be conducted within the boundaries of four prehistoric sites eligible for the NRHP. BPA is consulting with the State Historic Preservation Officer and tribes who elected to participate in Section 106 consultation to create a Cultural Resources Mitigation Plan that will minimize impacts on these prehistoric sites.
- Construction and maintenance activities could result in some impacts on known and unknown cultural resources; those potential impacts would be low to moderate depending on the level and amount of disturbance and type of site.
- Because the Proposed Action would adversely affect prehistoric sites, it would contribute incrementally to cumulative impacts on cultural resources.

Socioeconomics and Public Services: Impacts on socioeconomics and public services would be low and some effects would be beneficial.

- The 8-month construction period would not be long enough to induce any permanent changes in the study area population or permanently affect economic activity in the area, although the rebuilt transmission line could contribute to regional stability and economic growth by reliably meeting power demands, a long-term beneficial effect.
- The local economy would be temporarily stimulated through some material purchases in the area, payroll to construction workers, and related indirect or multiplier effects, a short-term beneficial effect.
- Temporary interference with agricultural and forestry operations along the right-of-way would occur but is not expected to result in long-term disruption.
- During construction, some temporary impacts on property value and salability could occur on an individual basis, but they would not likely last in any one location for more than a few days. The Proposed Action would have no impact on property taxes, because the footprint of the transmission line would not change.
- Construction and maintenance activities would have a temporary and minimal impact on public services.
- The Proposed Action would not noticeably contribute to cumulative impacts on socioeconomics and public services because of the minimal, temporary nature of impacts.

Noise: Noise impacts from construction and maintenance work would be low to moderate.

- Construction and maintenance activities would result in a temporary increase in ambient noise for some sensitive receptors; the level of impact would depend on the proximity of sensitive noise receptors to the noise disturbance.

- Operation of the rebuilt transmission line would continue at 115 kV, resulting in noise levels that could slightly exceed nighttime state noise standards at the western edge of the right-of-way under wet conditions. However, noise levels would likely decrease to below the 45-dBA nighttime threshold at nearby residences.
- Because noise created during construction and maintenance would be temporary and the noise levels from operation of the rebuilt transmission line would be comparable to those of the existing transmission line, the Proposed Action would not contribute to an increase in long-term cumulative noise impacts in the project vicinity.

Public Health and Safety: Impacts on public health and safety would be low.

- Health and safety risks associated with construction include increased risk of electrical shocks or fires from high-voltage equipment and increased risk of fires and injury from the use of heavy equipment and hazardous materials near high-voltage lines. Standard construction safety procedures, including development of a Safety Plan, would be required and employed to minimize safety risks.
- Although a small increase in electric fields is predicted within the right-of-way, this increase would be negligible and no changes are expected beyond the right-of-way. Because some structure heights would increase, ground-level electric fields would decrease slightly within some portions of the right-of-way.
- The slight increase in magnetic fields projected along the edge of the right-of-way is less than the exposure generated by a television and is considered to be negligible.
- The Proposed Action is expected to either not change or possibly slightly reduce radio and television interference along the right-of-way.
- The Proposed Action would not cumulatively increase the overall level of electromagnetic frequency exposure along the right-of-way and the rebuilt transmission line would have similar levels to those of the existing line.

Air Quality: Impacts on air quality would be low.

- Construction activities could temporarily increase dust and particulate levels in localized areas, but this would be partially reduced by implementing dust suppression methods.
- Operation of heavy equipment during construction and maintenance could result in temporary and localized increases in air pollutants.
- Operation of the transmission line emits limited amounts of ozone and oxides of nitrogen as a result of the corona effect; however, these substances are released in quantities generally too small to be measured or to have an impact on humans, animals, or plants. Corona emissions under the Proposed Action would be similar to levels present under existing conditions.

- While the Proposed Action would contribute a small amount to cumulative air pollutant levels, it is not expected that cumulative concentrations would result in a violation of air quality standards.

Greenhouse Gases: Impacts from greenhouse gas (GHG) emissions would be low.

- GHG emissions from the use of gasoline- and diesel-powered vehicles during construction and from land use changes as a result of structure and road construction would be below the U.S. Environmental Protection Agency's mandatory reporting threshold.
- All levels of GHG emissions, from small to large, play a role in contributing to global GHG concentrations and climate change. Given the extremely low amount of contribution of the Rebuild Project, however, the cumulative impact on GHG concentrations would be low.

Floodplain Statement of Findings: This Floodplain Statement of Findings was prepared in accordance with 10 CFR Part 1022. BPA is proposing to rebuild the existing Bandon-Rogue transmission line in the existing right-of-way that crosses the 100-year floodplains of Johnson Creek, Crooked Creek, Twomile Creek, South Twomile Creek, Fourmile Creek, and Bethel Creek in Coos County; and Floras Creek, Sixes River, Elk River, Hubbard Creek, and Euchre Creek in Curry County. An assessment of impacts on floodplains is summarized below and discussed in greater detail in Chapter 3.8 of the Final EA.

During the design phase of the Rebuild Project, impacts to 100-year floodplains were avoided by locating all proposed new project elements outside floodplains. New wood-pole structures or access roads that do not currently exist would all be located at least 200 feet from floodplains.

Work within floodplains would include removal and replacement of six existing wood-pole structures. Structures 14/4 and 14/5 would be replaced within the floodplain along Floras Creek. Structures 24/3, 24/4, and 24/5 would be replaced in the floodplain along the Elk River. Structure 40/5 would be replaced in the floodplain along Euchre Creek. These structures could not be relocated outside floodplains due to engineering constraints.

Road work would be conducted on some existing unpaved access roads within 100-year floodplains. BPA is unable to avoid use of these existing access roads within floodplains. Due to the steep terrain in these areas, there are no other practicable alternatives to reach these structures. Because these access roads are also used by farmers and residents, these roads would continue to exist in floodplains even if BPA sought alternate access.

Access road work within floodplains would include improving and reconstructing some roads. Improving access roads involves grading and rocking the road surface. Approximately 750 feet (0.14 mile) of access road would be improved within the floodplain along Floras Creek (50 feet) and along Hubbard Creek (700 feet). Access road reconstruction involves work on the road bed in addition to the road surface. Approximately 800 feet (0.15 mile) of access road would be reconstructed within floodplains, including the replacement of two culverts.

Unavoidable direct floodplain impacts could occur as a result of soil compaction, vegetation removal, and increased sedimentation. Effects from construction within floodplains would be temporary and localized. Conductor tensioning sites would be located outside of floodplains, where possible. Impacts from construction would be minimized through the use of best management practices to minimize sedimentation. Relevant best management practices that would be implemented include the following.

- Conduct peak construction activities during the dry season (between June 1 and November 1), as much as possible, to minimize erosion, sedimentation, and soil compaction.
- Inspect erosion and sediment controls weekly, maintain them as needed to ensure their continued effectiveness, and remove them from the site when vegetation is re-established and the site has been stabilized.
- Design and construct access roads to minimize drainage from the road surface directly into surface waters, size new and replacement culverts large enough to accommodate predicted flows, and size and space cross drains and water bars properly to accommodate flows and direct sediment-laden waters into vegetated areas.
- Delineate construction limits within 200 feet of streams, other waterbodies, wetlands, and floodplains; manage sediment as specified in the SWPP Plan, with an approved method that meets the *Stormwater Management Manual for Western Washington* (Washington State Department of Ecology 2005) erosion and stormwater control best management practices, to eliminate sediment discharge into waterways and wetlands, minimize the size of construction disturbance areas, and minimize removal of vegetation, to the greatest extent possible.

With the implementation of best management practices, construction would only minimally alter floodplain functions and would not alter the existing flood storage capacity. Therefore, direct impacts on floodplains from construction activities are expected to be low.

Indirect impacts on floodplains could occur where structure and access road construction would occur outside of but within 200 feet of floodplains. Activities within 200 feet of floodplains include replacing three existing wood-pole structures near floodplains (Two mile Creek, Elk River, and Euchre Creek). Access road improvement (a total of approximately 2,200 feet or 0.42 mile) would take place near Johnson Creek, Sixes River, Elk River, and Hubbard Creek floodplains. Access road reconstruction (a total of approximately 2,000 feet or 0.38 mile) would take place near Crooked Creek, Floras Creek, and Elk River floodplains. Impacts would be limited to incidental amounts of sediment deposition in the floodplain from soil erosion in disturbed areas. Therefore, this would be a low impact.

Operation and maintenance activities within and near floodplains could result in direct and indirect impacts on floodplains. Impacts would be limited to incidental amounts of sediment

deposition in the floodplain from soil erosion in disturbed areas and removal or disturbance of vegetation from vegetation management activities. These impacts would not result in significant changes to floodplain capacity nor would they alter flood flows. Therefore, this would be considered a low impact.

Past, present, and future activities in the project vicinity, including utility and road construction and maintenance, agricultural activities, forestry, and residential and recreational development have cumulatively affected floodplains. Overall, the Proposed Action is not expected to contribute noticeably to cumulative changes in floodplain qualities and function, due to the small area that would be affected.

The Proposed Action conforms to applicable state or local floodplain protection standards. BPA will allow 15 days of public review of this statement of findings before implementing the Proposed Action.

Determination: Based on the information in the Final EA, as summarized here, BPA determines that the Proposed Action is not a major federal action significantly affecting the quality of the human environment within the meaning of NEPA, 42 USC 4321 et seq. Therefore, an EIS will not be prepared and BPA is issuing this FONSI for the Proposed Action.

Issued in Portland, Oregon.

/s/ F. Lorraine Bodi	*May 3, 2011*
F. Lorraine Bodi	Date
Vice President	
Environment, Fish and Wildlife	

This page left intentionally blank.

Bonneville Power Administration

Bandon-Rogue Transmission Line Rebuild Project

Final Environmental Assessment

May 2011

This page left intentionally blank.

Table of Contents

Chapter 1 Purpose of and Need for Action 1-1
1.1. Introduction 1-1
1.2. Underlying Need for Action 1-1
1.3. Purposes of Action 1-1
1.4. Public Involvement 1-3
Chapter 2 Proposed Action and Alternatives 2-1
2.1. Proposed Action 2-1
2.1.1. Project Elements 2-2
2.1.2. Construction Activities 2-11
2.1.3. Operation and Maintenance 2-15
2.2. No Action Alternative 2-15
2.3. Alternatives Considered but Eliminated from Detailed Study 2-16
2.4. Comparison of Alternatives 2-16
Chapter 3 Affected Environment, Environmental Consequences, and Mitigation 3.1-1
3.1. Introduction 3.1-1
3.2. Land Use and Recreation 3.2-1
3.2.1. Affected Environment 3.2-1
3.2.2. Environmental Consequences—Proposed Action 3.2-5
3.2.3. Mitigation—Proposed Action 3.2-7
3.2.4. Unavoidable Impacts Remaining After Mitigation—Proposed Action 3.2-8
3.2.5. Cumulative Impacts—Proposed Action 3.2-8
3.2.6. Environmental Consequences—No Action Alternative 3.2-9
3.3. Visual Quality 3.3-1
3.3.1. Affected Environment 3.3-1
3.3.2. Environmental Consequences—Proposed Action 3.3-4
3.3.3. Mitigation—Proposed Action 3.3-7
3.3.4. Unavoidable Impacts Remaining After Mitigation—Proposed Action 3.3-8
3.3.5. Cumulative Impacts—Proposed Action 3.3-8
3.3.6. Environmental Consequences—No Action Alternative 3.3-9
3.4. Geology and Soils 3.4-1
3.4.1. Affected Environment 3.4-1
3.4.2. Environmental Consequences—Proposed Action 3.4-3
3.4.3. Mitigation—Proposed Action 3.4-5
3.4.4. Unavoidable Impacts Remaining After Mitigation—Proposed Action 3.4-5
3.4.5. Cumulative Impacts—Proposed Action 3.4-6
3.4.6. Environmental Consequences—No Action Alternative 3.4-6

3.5. Vegetation....3.5-1
3.5.1. Affected Environment....3.5-1
3.5.2. Environmental Consequences—Proposed Action....3.5-6
3.5.3. Mitigation—Proposed Action....3.5-8
3.5.4. Unavoidable Impacts Remaining After Mitigation—Proposed Action....3.5-9
3.5.5. Cumulative Impacts—Proposed Action....3.5-10
3.5.6. Environmental Consequences—No Action Alternative....3.5-10
3.6. Waterways and Water quality....3.6-1
3.6.1. Affected Environment....3.6-1
3.6.2. Environmental Consequences—Proposed Action....3.6-2
3.6.3. Mitigation—Proposed Action....3.6-11
3.6.4. Unavoidable Impacts Remaining After Mitigation—Proposed Action....3.6-12
3.6.5. Cumulative Impacts—Proposed Action....3.6-12
3.6.6. Environmental Consequences—No Action Alternative....3.6-13
3.7. Wetlands....3.7-1
3.7.1. Affected Environment....3.7-1
3.7.2. Environmental Consequences—Proposed Action....3.7-2
3.7.3. Mitigation—Proposed Action....3.7-3
3.7.4. Unavoidable Impacts Remaining After Mitigation—Proposed Action....3.7-4
3.7.5. Cumulative Impacts—Proposed Action....3.7-5
3.7.6. Environmental Consequences—No Action Alternative....3.7-5
3.8 Floodplains....3.8-1
3.8.1. Affected Environment....3.8-1
3.8.2. Environmental Consequences—Proposed Action....3.8-1
3.8.3. Mitigation—Proposed Action....3.8-3
3.8.4. Unavoidable Impacts Remaining After Mitigation—Proposed Action....3.8-4
3.8.5. Cumulative Impacts—Proposed Action....3.8-4
3.8.6. Environmental Consequences—No Action Alternative....3.8-4
3.9. Fish 3.9-1
3.9.1. Affected Environment....3.9-1
3.9.2. Environmental Consequences—Proposed Action....3.9-2
3.9.3. Mitigation—Proposed Action....3.9-6
3.9.4. Unavoidable Impacts Remaining After Mitigation—Proposed Action....3.9-6
3.9.5. Cumulative Impacts—Proposed Action....3.9-7
3.9.6. Environmental Consequences—No Action Alternative....3.9-7
3.10. Wildlife....3.10-1
3.10.1. Affected Environment....3.10-1
3.10.2. Environmental Consequences—Proposed Action....3.10-3
3.10.3. Mitigation—Proposed Action....3.10-8

3.10.4. Unavoidable Impacts Remaining After Mitigation—Proposed Action.....3.10-8
3.10.5. Cumulative Impacts—Proposed Action.....3.10-9
3.10.6. Environmental Consequences—No Action Alternative.....3.10-9
3.11. Cultural Resources.....3.11-1
3.11.1. Affected Environment.....3.11-1
3.11.2. Environmental Consequences—Proposed Action.....3.11-2
3.11.3. Mitigation—Proposed Action.....3.11-3
3.11.4. Unavoidable Impacts Remaining After Mitigation—Proposed Action.....3.11-4
3.11.5. Cumulative Impacts—Proposed Action.....3.11-4
3.11.6. Environmental Consequences—No Action Alternative.....3.11-4
3.12. Socioeconomics and Public Services.....3.12-1
3.12.1. Affected Environment.....3.12-1
3.12.2. Environmental Consequences—Proposed Action.....3.12-3
3.12.3. Mitigation—Proposed Action.....3.12-4
3.12.4. Unavoidable Impacts Remaining After Mitigation—Proposed Action.....3.12-5
3.12.5. Cumulative Impacts—Proposed Action.....3.12-5
3.12.6. Environmental Consequences—No Action Alternative.....3.12-5
3.13. Noise 3.13-1
3.13.1. Affected Environment.....3.13-1
3.13.2. Environmental Consequences—Proposed Action.....3.13-2
3.13.3. Mitigation—Proposed Action.....3.13-4
3.13.4. Unavoidable Impacts Remaining After Mitigation—Proposed Action.....3.13-4
3.13.5. Cumulative Impacts—Proposed Action.....3.13-4
3.13.6. Environmental Consequences—No Action Alternative.....3.13-5
3.14. Public Health and Safety.....3.14-1
3.14.1. Affected Environment.....3.14-1
3.14.2. Environmental Consequences—Proposed Action.....3.14-2
3.14.3. Mitigation—Proposed Action.....3.14-4
3.14.4. Unavoidable Impacts Remaining After Mitigation—Proposed Action.....3.14-5
3.14.5. Cumulative Impacts—Proposed Action.....3.14-5
3.14.6. Environmental Consequences—No Action Alternative.....3.14-5
3.15. Air Quality.....3.15-1
3.15.1. Affected Environment.....3.15-1
3.15.2. Environmental Consequences—Proposed Action.....3.15-1
3.15.3. Mitigation—Proposed Action.....3.15-2
3.15.4. Unavoidable Impacts Remaining After Mitigation—Proposed Action.....3.15-2
3.15.5. Cumulative Impacts—Proposed Action.....3.15-2
3.15.6. Environmental Consequences—No Action Alternative.....3.15-3

3.16. Greenhouse Gases 3.16-1
3.16.1. Affected Environment 3.16-1
3.16.2. Environmental Consequences—Proposed Action 3.16-2
3.16.3. Mitigation—Proposed Action 3.16-3
3.16.4. Unavoidable Impacts Remaining After Mitigation—Proposed Action 3.16-3
3.16.5. Cumulative Impacts—Proposed Action 3.16-3
3.16.6. Environmental Consequences—No Action Alternative 3.16-4

Chapter 4 Environmental Consultation, Review, and Permit Requirements 4-1

4.1. National Environmental Policy Act 4-1
4.2. Fish and Wildlife 4-1
4.2.1. Endangered Species Act 4-1
4.2.2. Fish and Wildlife Conservation 4-3
4.2.3. Essential Fish Habitat 4-3
4.2.4. Migratory Bird Treaty Act 4-4
4.2.5. Responsibilities of Federal Agencies to Protect Migratory Birds 4-4
4.2.6. Bald Eagle and Golden Eagle Protection Act 4-5
4.3. Floodplains and Wetlands Protection 4-5
4.4. Coastal Zone Management Act 4-7
4.5. State, Areawide, and Local Plan and Program Consistency 4-7
4.5.1. Land Use Planning Framework 4-7
4.6. Oregon Forest Practices Act 4-8
4.7. Cultural and Historical Resources 4-8
4.8. Air Quality 4-10
4.9. Global Warming 4-10
4.10. Hazardous Materials 4-11
4.10.1. The Spill Prevention Control and Countermeasures Act 4-11
4.10.2. Title III of the Superfund Amendments Act 4-11
4.10.3. Uniform Fire Code 4-11
4.10.4. Toxic Substances Control Act 4-12
4.10.5. Federal Insecticide, Fungicide, and Rodenticide Act 4-12
4.10.6. Resource Conservation and Recovery Act 4-12
4.11. Executive Order on Environmental Justice 4-12
4.12. Noise 4-13
4.13. Transportation 4-13
4.14. Federal Communications Commission 4-13
4.15. Farmland Protection Policy Act 4-13
4.16. Notice to the Federal Aviation Administration 4-14
4.17. Permits for Right-of-Way on Public Lands 4-14
4.18. Requirements Not Applicable to this Project 4-14

4.18.1. Permits for Structures in Navigable Waters 4-14
4.18.2. Safe Drinking Water Act 4-14
4.18.3. Energy Conservation at Federal Facilities 4-14
4.18.4. Recreation Resources 4-14

Chapter 5 Persons, Tribes, and Agencies Consulted 5-1

5.1. Introduction 5-1
5.2. Federal 5-1
5.3. State 5-1
5.4. Tribes 5-2
5.5. Local Government 5-2
5.6. Utilities 5-3
5.7. Libraries 5-3
5.8. Media 5-3
5.9. Nonprofit Groups and Other Organizations 5-3
5.10. Landowners and Trustees in the Project Area 5-3

Chapter 6 Glossary 6-1

Chapter 7 References 7-1

7.1. Written References 7-1
7.2. Personal Communication 7-7

Chapter 8 Public/Agency Comments and Responses 8-1

Appendix A. Proposed Changes to Existing Structures

Appendix B. Other Projects in the Rebuild Project Vicinity

Appendix C. Vegetation Data Tables

Appendix D. Bandon-Rogue Transmission Line Rebuild Project Weed Management Plan

Appendix E. Proposed Structure Installation and Access Road Work within 200 Feet of Streams

Appendix F. Existing and Proposed Structures within 100 Feet of Wetlands

Appendix G. Fish Species Occurrence in Rebuild Project Area Streams

Appendix H. Study Area Special-Status Wildlife Species

Appendix I. Proposed Bandon-Rogue Transmission Line Rebuild Project Greenhouse Gas Emissions Analysis Report

Appendix J. Mitigation Action Plan

List of Tables

1-1 Summary of Comments and Input on the Proposed Action 1-5

2-1 Existing and Rebuilt Transmission Line Elements 2-1

2-2 Rebuild Project Proposed Activities 2-2

2-3 Equipment Used in Access Road Work 2-13

2-4 Comparison of How the Proposed Action and No Action Alternative Respond to the Project Purpose 2-17

3-1 Summary of Impacts of the Proposed Action and No Action Alternative with Implementation of Appropriate Mitigation 3.1-2

3.6-1 Streams in the Study Area with Impaired Water Quality Parameters 3.6-1

3.8-1 Proposed Work within 200 Feet of 100-Year Floodplains 3.8-2

3.9-1 Criteria Used for Design of Culverts in Fish-Bearing Streams 3.9-3

3.13-1 Common Activities and Associated Noise Levels 3.13-1

3.13-2 Construction Noise 3.13-3

3.13-3 Right-of-Way Audible Noise (dBA, wet conditions) 3.13-4

3.14-1 Typical Magnetic Field Strengths (1 Foot from Common Appliances) 3.14-2

3.14-2 Right-of-Way Electric Field (kilovolts per meter) for Existing and Proposed Transmission Line 3.14-3

3.14-3 Right-of-Way Magnetic Field (milligauss) for Existing and Proposed Transmission Line 3.14-3

List of Figures

1-1 Project Location 1-3

2-1 Bandon-Rogue and Fairview-Rogue Transmission Lines 2-5

2-2 Existing and Proposed Wood-Pole Structures 2-7

3.2-1 Land Use 3.2-3

3.3-1 View of Bandon-Rogue Transmission Line from U.S. Highway 101 at Sixes River 3.3-2

3.3-2 View of Bandon-Rogue Transmission Line from Stonecypher Road 3.3-3

3.3-3 View of Bandon-Rogue Transmission Line from Humbug Mountain State Park Day-Use Area 3.3-4

3.4-1 Landslide Hazard Areas 3.4-3

3.6-1 Floodplains and Waterways with Existing Structure Locations 3.6-3

3.6-2 Floodplains and Waterways with Existing Structure Locations 3.6-5

3.6-3 Floodplains and Waterways with Existing Structure Locations 3.6-7

3.6-4 Floodplains and Waterways with Existing Structure Locations 3.6-9

Acronyms and Abbreviations

BA	biological assessment
BLM	U.S. Bureau of Land Management
BPA	Bonneville Power Administration
CO	carbon monoxide
CO_2	carbon dioxide
CO_2e	carbon dioxide equivalent
COTR	Contracting Officer's Technical Representative
CZMA	Coastal Zone Management Act
dBA	A-weighted decibel
dbh	diameter at breast height
DLCD	Oregon Department of Land Conservation and Development
EA	Environmental Assessment
EFH	essential fish habitat
EIS	Environmental Impact Statement
EMF	electric and magnetic fields
EMI	electromagnetic interference
EPA	U.S. Environmental Protection Agency
ESA	federal Endangered Species Act
ESU	evolutionarily significant unit
FAA	Federal Aviation Administration
FCC	Federal Communications Commission
FONSI	Finding of No Significant Impact
FPA	Oregon Forest Practices Act
GHG	greenhouse gases
kV	kilovolt
kV/m	kilovolts per meter
mG	milligauss
MOU	memorandum of understanding
NAAQS	National Ambient Air Quality Standards
NEPA	National Environmental Policy Act
NESC	National Electrical Safety Code
NHPA	National Historic Preservation Act
NMFS	National Marine Fisheries Service
NRHP	National Register of Historic Places
NWI	National Wetland Inventory

OC coho	Oregon Coast coho
OCMP	Oregon Coastal Management Plan
ODEQ	Oregon Department of Environmental Quality
ODFW	Oregon Department of Fish and Wildlife
PCB	polychlorinated biphenyl
PCE	primary constituent element
PM10	particulate matter less than 10 micrometers in size
PM2.5	particulate matter less than 2.5 micrometers in size
RCRA	Resource Conservation and Recovery Act
SHPO	State Historic Preservation Officer
SONCC coho	Southern Oregon/Northern California Coasts coho
SWPP Plan	Stormwater Pollution Prevention Plan
TCP	Traditional Cultural Property
USC	U.S. Government Code
USFWS	U.S. Fish and Wildlife Service

This page left intentionally blank.

Chapter 1
Purpose of and Need for Action

1.1. INTRODUCTION

This Environmental Assessment (EA) was prepared by Bonneville Power Administration (BPA) pursuant to regulations implementing the National Environmental Policy Act (NEPA) (U.S. Government Code [USC], Title 42, Sections 4321 et seq.), which requires federal agencies to assess the impacts their actions may have on the environment. Major federal actions significantly affecting the quality of the human environment must be evaluated in an Environmental Impact Statement (EIS). BPA prepared this EA to determine if its Bandon-Rogue Transmission Line Rebuild Project (Rebuild Project or Proposed Action) would cause effects of a magnitude that would warrant preparing an EIS, or whether it is appropriate to prepare a Finding of No Significant Impact (FONSI).

1.2. UNDERLYING NEED FOR ACTION

BPA needs to take action to ensure the integrity and reliability of the existing Bandon-Rogue transmission line (Figure 1-1). This 46-mile, 115-***kilovolt***[1] (kV) transmission line, located between the BPA Bandon Substation and the BPA Rogue Substation in Coos and Curry counties, is old, physically worn, and structurally unsound in places. The transmission line was originally built in the early 1950s by BPA. The original ***conductor*** has not been replaced and does not meet current standards. The poor condition of the transmission line creates risks to public and worker safety and could lead to unreliable electrical service.

Today, the existing wood-pole transmission line ***structures*** (structures) and conductors show normal deterioration due to age. The bases of some structures have been undermined, because the underlying soils are unstable.

In addition to these structural issues, there is a need to provide better access to the transmission line. Some structures do not have permanent access roads to reach them, which makes normal and emergency maintenance difficult and at times unsafe. Other roads need to be improved to ensure that the line can be accessed year round.

1.3. PURPOSES OF ACTION

- In proposing an action to meet the underlying need, BPA hopes to achieve the following objectives (i.e., purposes): meet transmission system public safety and reliability standards set by the National Electrical Safety Code (NESC),
- minimize environmental impacts,
- improve safety for transmission line workers,
- demonstrate cost-effectiveness, and
- use facilities and resources efficiently.

[1] Terms defined in Chapter 6, Glossary, are shown in bold, italicized typeface the first time they are used.

1.4. PUBLIC INVOLVEMENT

BPA conducted public outreach for the Proposed Action through various means, including providing notice of the Proposed Action, the environmental process, and opportunities to comment. On February 3, 2010, BPA sent a letter to people potentially interested in or affected by the Proposed Action, including adjacent landowners, public interest groups, local governments, tribes, and state and federal agencies. The letter explained the proposal, the environmental process, and how to participate. The letter also was posted on the BPA website at: http://www.efw.bpa.gov/environmental_services/Document_Library/Bandon-Rogue_Rebuild/.

BPA held two public scoping meetings to describe the project and to solicit comments. One public meeting was held on February 23, 2010, in Bandon; the other was held on February 24, 2010, in Port Orford. The public comment period began on February 22, 2010, and closed on March 19, 2010.

Comments received during the comment period, both written and oral, were considered in the environmental analysis of the Proposed Action. Comments received after the comment period ended were also considered in the environmental review. In addition, BPA created a webpage specifically for the Rebuild Project with information about the project and the EA process (see http://www.efw.bpa.gov/environmental_services/Document_Library/Bandon-Rogue_Rebuild/). The letter described above and the Rebuild Project map were posted on this webpage. Scoping comments were posted on the BPA website.

BPA determined that four tribes have a potential interest in the Proposed Action. BPA requested information from these tribes on ***cultural resources*** in the project vicinity. BPA provided information about the Proposed Action to tribal representatives and solicited comments about the potential impacts of the Proposed Action on cultural resources. This information was used to shape the cultural resource field investigation for the Proposed Action.

Table 1-1 summarizes the written and oral comments on the Proposed Action received from landowners, state agencies, federal agencies, and tribes during the scoping period. These topics are addressed in appropriate sections in the EA.

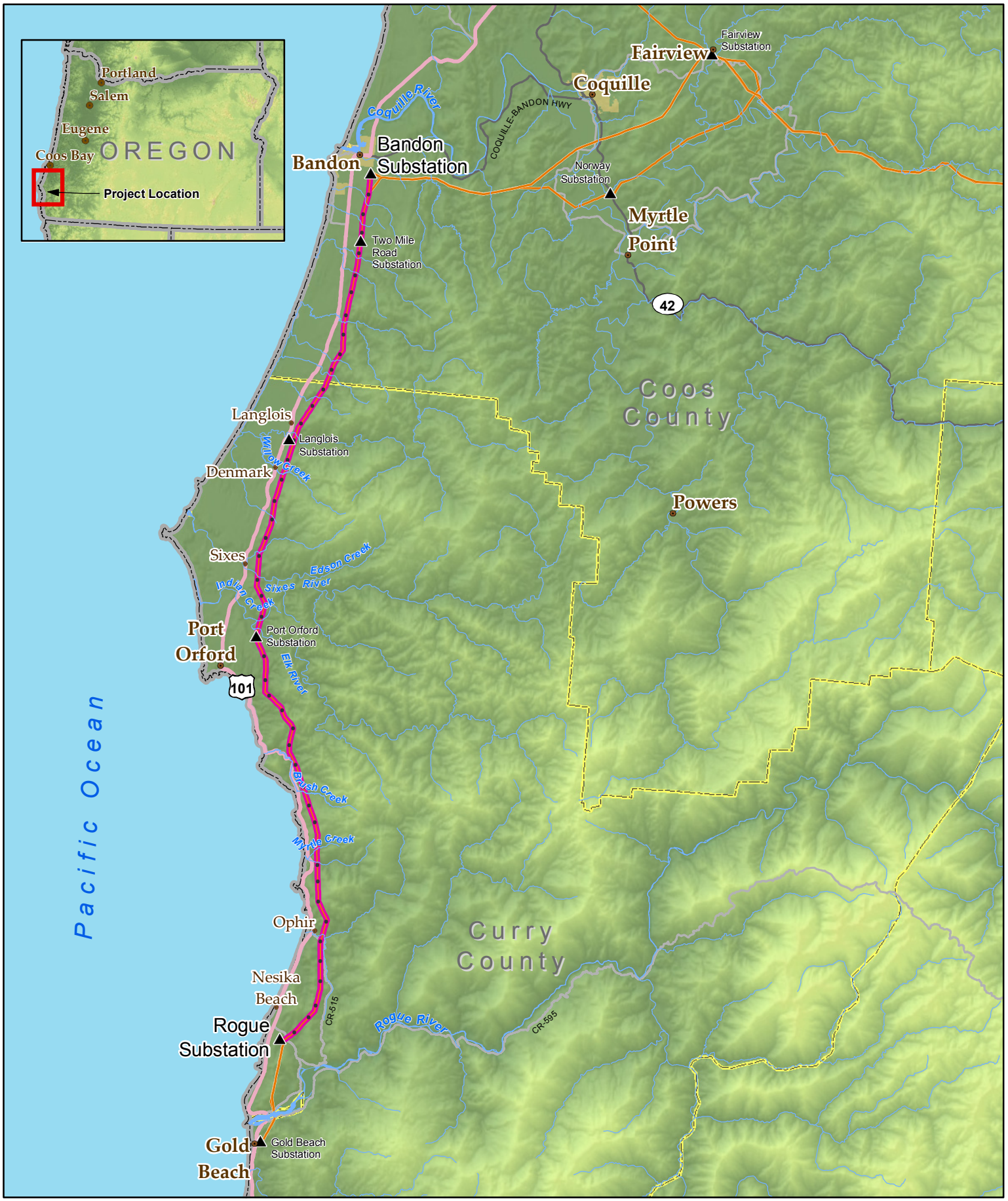

BPA Proposed Bandon-Rogue No. 1 Transmission Line Rebuild Project

Project Location

0 2.5 5 10 Miles

▲ BPA Substation

• First Structure of Each Mile

Bandon-Rogue Transmission Line

Other BPA Transmission Lines

Major Rivers & Creeks

County Boundary

N W E S

01/03/2010

BONNEVILLE POWER ADMINISTRATION

Figure 1-1

This page left intentionally blank.

Table 1-1. Summary of Comments and Input on the Proposed Action

Topic Area	Comment Summary
Vegetation	• Concerns about the introduction and spread of invasive species and recommended actions to prevent/control weed spread • Comments on gorse invasion and control and potential fire hazard • Requests that BPA conduct a baseline study of weeds present before construction begins, create a Weed Control Management Plan and ask stakeholders for comment, and conduct regular assessments of weed presence and control weeds • Concern there is the potential to spread sudden oak death syndrome and Port Orford cedar disease • Landowner concerns and recommendations/requests regarding BPA vegetation management practices, including danger tree removal • Recommendations that the seed mix used for revegetation after construction depend on type of area, and that either a native mix, certified seed, or species requested by landowner be used
Fish and Wildlife	• Concern about impacts on birds, including marbled murrelet • Concerns about impacts on fish-bearing streams and wetlands from project activities and ongoing maintenance, including removal of vegetation along riparian areas, disturbance of soils resulting in sedimentation, chemical and fuel spills, and problems with increased access for ATV users • Need for revegetation with native plants along riparian areas • Need to minimize impacts at river crossings on fish species from erosion, sedimentation, and herbicide use
State Requirements	• Determine if a state permit is required for crossing state lands and waterways • Use state criteria for culvert design on fish-bearing streams • Need for BPA to engage in agency coordination and actions that need to be taken to be in compliance with Oregon Coastal Management Program
Cultural Resources	• Questions and recommendations on the type of cultural resources survey needed for this project and the need to work with tribes on survey methodology • Comments on the type of areas that have the potential to have cultural sites
Transmission Line Design	• Recommendation to use two large metal structures to span an area in order to eliminate several wood-pole structures that interfere with farm uses • Recommendation to convert transmission line facilities to an underground transmission line
Concerns about Impacts on Farming Activities	• Concerns about potential damage to fences during construction • Concerns about disruption of and harm to livestock from construction and maintenance on farmland • Need to prevent the introduction and spread of weeds onto farmland

Topic Area	Comment Summary
Transmission Line Access Road Maintenance	• Landowner concerns and recommendations/requests regarding existing access road maintenance • Recommendations for road construction design and maintenance practices, including use of best management practices that would reduce sedimentation to streams • Need to prevent general public access to roads to prevent weed spread, sedimentation, and dumping of trash
Effects of Construction on Resources	• Concerns about timing of work and the adverse effects on soils, vegetation, crops, and roads from working during the rainy season • Concerns about the effect of construction and maintenance on pasture areas and livestock
Other Topics	• Need for a process that enables landowners to know how to communicate with BPA staff when problems arise • Recommendation on when BPA should contact landowners with information • Request to consider use of local supplies, services, and labor, where possible • Requests by local residents to obtain the old wood-pole structures for use in various projects

BPA ~~is releasing this~~released the Preliminary EA for review and comment on January 27, 2011. Chapter 5 lists agencies, tribes, landowners and other stakeholders who were sent a letter announcing the availability of the Preliminary EA, information on how to receive or access a copy, and information on how to submit comments by phone, e-mail, or letter. The Preliminary EA was mailed to persons and agencies who requested a hardcopy; an electronic copy was e-mailed to persons requesting an electronic copy. In addition to distributing the Preliminary EA to interested parties, the Preliminary EA, distribution letter, comment form, and information on how to comment was ~~is~~ posted on the BPA website for this project (http://www.efw.bpa.gov/environmental_services/Document_Library/Bandon-Rogue_Rebuild/).

During the public review period for the Preliminary EA, BPA ~~will accept~~accepted comments orally, via e-mail, and by letter. The initial comment period ended February 27, 2011, but was extended to March 11, 2011. BPA received 17 comments from landowners and agencies. BPA ~~will consider~~considered all comments received during the review period in preparing the Final EA. Chapter 8 of the~~The~~ Final EA ~~will include~~includes responses to all substantive comments received. Based on the Final EA, BPA will determine whether to prepare an EIS or a FONSI for the Proposed Action.

Chapter 2
Proposed Action and Alternatives

This chapter describes the Proposed Action, the No Action Alternative, and alternatives considered but eliminated from detailed study. This chapter also compares the Proposed Action and the No Action Alternative to the project purposes, as well as the potential environmental impacts of each of these two alternatives.

2.1. PROPOSED ACTION

The Proposed Action (Rebuild Project) is to rebuild the existing 115-(kV Bandon-Rogue transmission line, conduct work on some access roads, and remove some ***danger trees***. The transmission line extends south from the existing BPA Bandon Substation, located within the city of Bandon, Oregon, to the existing BPA Rogue Substation, located near the town of Nesika Beach, Oregon. The 46-mile-long transmission line roughly parallels U.S. 101 and is within 0.5 to 5 miles of the Pacific Coast, depending on the location (Figure 1-1). The northern portion of the transmission line, approximately 12 miles in length, is located in Coos County, and the remaining 34 miles are located in Curry County.

The rebuilt transmission line would be similar to the existing transmission line in design and appearance. It would be within the same alignment, within the same transmission line corridor and would not require the acquisition of any new ***right-of-way***[1]. The main elements of the existing and rebuilt transmission lines are compared in Table 2-1.

Table 2-1. Existing and Rebuilt Transmission Line Elements

Project Element	Existing Transmission Line	Rebuilt Transmission Line
Operating voltage	115 kilovolts	115 kilovolts
Wood-pole structures	283	302
Two-pole wood structures	239	253
Three-pole wood structures	44	49
Structure height range (above ground)	40–90 feet	40–100 feet
Conductor diameter	0.642 inch	1.1 inches

Project activities fall into three general categories: transmission line rebuild activities, access road work, and vegetation management. These activities are described below (Table 2-2).

[1] Terms defined in the glossary (Chapter 6) are shown in bold, italicized typeface the first time they are used.

Table 2-2. Rebuild Project Proposed Activities

Proposed Activity	Quantity
Transmission line rebuild activities	
Removal of existing wood poles	283
Replacement of existing wood poles	283
Installation of additional wood poles, not currently part of the existing transmission line	19
Removal and replacement of conductor	The new conductor consists of three phases, or wires, that would be replaced along the entire length of the transmission line.
Access road work	
New access road construction	0.7 mile ~~4,047 feet~~
Reconstruction of existing access roads	15.4 miles ~~84,487 feet~~
Improvements to existing access roads	29.9 miles ~~158,706 feet~~
New culverts	2 ~~6~~
Replacement culverts	33 ~~35~~
Cross-drain culverts	As needed
Bridge replacements	2 ~~1~~
Ford improvement	1
Gate installation or replacement	As needed
Vegetation Management	
Removal of danger trees	587
Removal of vegetation within the right-of-way	As needed
Removal of vegetation along existing access roadsides	As needed

2.1.1. Project Elements

Transmission Line Rebuild Activities

Existing Transmission Line and Right-of-Way

The transmission line currently consists of 283 wood-pole structures. Each structure is designated by a unique number based on the distance from north to south from the Bandon Substation (the designated start point) and the number of structures within a given mile. For example, in the first mile from the Bandon Substation (Line Mile 1), there are ten structures. The first structure heading north from Bandon Substation is Structure1/1 and the second

structure is Structure 1/2, up to the tenth structure, Structure 1/10. Numbering in the second line mile begins with Structure 2/1 and ends with the last of six structures, Structure 2/6.

The right-of-way is located mostly on privately owned lands. The land uses within and adjacent to the right-of-way are mainly rural residential, agricultural (mainly cranberry growing and livestock grazing), and timber production. Approximately 4,400 linear feet of the right-of-way are on public lands: approximately 3,000 feet on lands owned by Oregon State Parks, 1,400 feet on lands owned and managed by the U.S. Bureau of Land Management (BLM), and the City of Bandon owns a small parcel near the Bandon Substation. The state lands include the easternmost portion of Humbug Mountain State Park; three structures and some access roads are located on the on state-owned lands. One structure and some access roads are located on BLM-managed lands.

In Line Mile 1, the transmission line is located within a 100-foot-wide right-of-way. At the approximate start of Line Mile 2, 1 mile south of the Bandon Substation, the transmission line is adjacent to the BPA Fairview-Rogue transmission line, a 230-kV transmission line with ***lattice steel structures*** (Figure 2-1). The two transmission lines run parallel to one another from this point to the end of Line Mile 46, at the Rogue Substation. They are in the same transmission line corridor, except for in two areas where they diverge a short distance apart. The combined right-of-way for both transmission lines is generally about 240 feet wide, but in some areas it widens up to 400 feet.

Replacement of Existing Structures

The existing wood-pole structures would be replaced with structures of similar design, made of either two or three wood poles. Two-pole structures are used in straight alignments or where the transmission line turns at angles less than 15 degrees. Three-pole structures are used where the transmission line changes direction at angles generally greater than 15 degrees.

Replacement structural components would be similar to existing structural components, including ***structure cross arms***, insulators, and dampers. Some structures would change from two poles to three poles or would be moved slightly ahead or behind their existing locations, and most structures would be taller than the existing structures. The number of existing structures that would be affected by the proposed changes is presented in Appendix A. Most of the proposed structures would be two-pole suspension structures (Table 2-1, Figure 2-2), constructed of only two poles, because they do not have to withstand the stresses created by angles in the conductor. Most existing two-pole structures would be replaced with two-pole structures, except for six existing two-pole structures that would be replaced with three-pole wood structures (Structures 4/2, 15/2, 15/3, 24/8, 46/5, and 46/6). All existing three-pole wood structures would be replaced with three-pole wood structures, except for one, Structure 34/3, which would be replaced with a two-pole structure.

Addition of New Structures

Nineteen structures would be added to the transmission line to decrease the span length between existing structures in certain locations along the transmissions line. Span length is the linear distance between two structures. Additional structures are needed in some spans because the proposed conductor is larger in diameter than the existing conductor, which increases the weight

of the conductor, causing it to sag closer to the ground. The additional structures would maintain adequate conductor-to-ground clearance and meet current safety standards. One new structure would be added along each of the following line miles, unless otherwise indicated: Line Miles 2, 7, 9, 16, 19, 22, 23, 24, 25, 26, 33 (2 new structures), 37 (2 new structures), 38, 39, 41, and 43 (2 new structures). In some locations, the new structure would be placed at the end of the line mile; however, in many situations, the structure would be located between two existing structures within a line mile. In the latter case, subsequent structures would be renamed.

Conductors, Overhead Ground Wires, and Counterpoise

Conductors

Alternating-current transmission lines, like the Bandon-Rogue transmission line, require three conductors to make a complete circuit. The existing conductor would be replaced, because it does not meet current standards. The proposed conductor would be made of steel and would have a slightly higher electrical ***capacity***. The existing conductor has a diameter of 0.642 inch; the proposed conductor would be larger, with a diameter of 1.1 inches. The new conductor would be more reflective than the existing conductor for the first few years after installation, until it naturally weathers and dulls.

The potential for avian (bird) collisions with the transmission line would be minimized by the installation of spiral bird diverters on the conductor over six waterways and floodplain areas spanned by the conductor. Spiral bird diverters are short (less than 1 foot in length), yellow coils of wire that surround the conductor at intervals. BPA would place spiral bird diverters on the outer two conductors at a spacing of 50 feet. The areas where spiral diverters would be installed include wide spans over Twomile Creek, South Twomile Creek, Floras Creek, Crystal Creek, Sixes River, and Elk River.

The existing conductor would be removed and the new conductor attached to structures using non-ceramic insulators. Insulators keep conductors a safe distance from other parts of the structure and prevent the electricity in the conductors from moving to other conductors, the structure, or the ground.

Overhead Ground Wire

Overhead ground wire is located in the first half of Line Mile 1, just south of Bandon Substation, on either side of Port Orford Substation (Line Miles 24 and 25), and in the last 1,000 feet before the Rogue Substation. These overhead ground wires would be removed and replaced at the same time the conductor is replaced. Overhead ground wires are attached to the top of certain structures to route electricity from lightning to the ground through the structure, preventing damage to the electrical equipment in the substations.

Counterpoise

Counterpoise is a system of underground wires that are attached to certain structures for additional lightning protection. The wires are laid out horizontally from the structure and buried in the ground. Counterpoise is located at the same structures as overhead ground wire, and would be replaced as needed.

Figure 2-1
Bandon-Rogue and Fairview-Rogue Transmission Lines
Bandon-Rogue Transmission Line Rebuild Project

This page left intentionally blank.

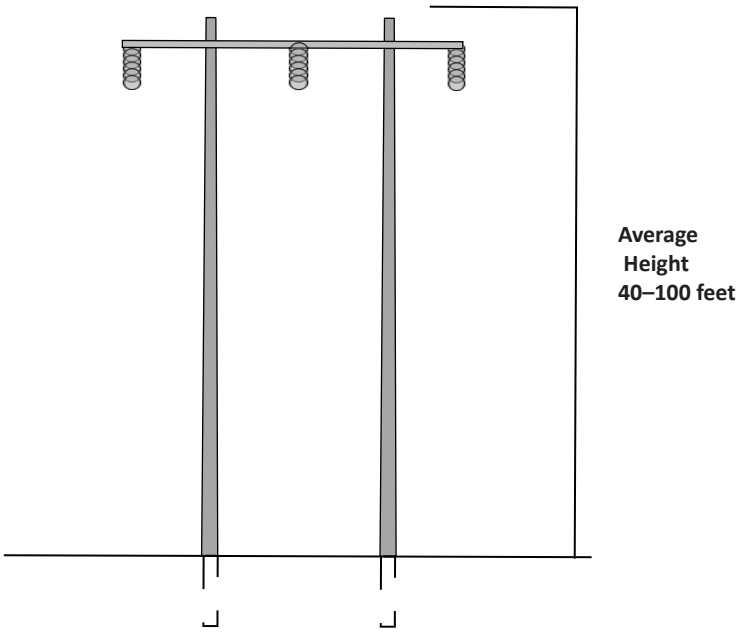

Existing and Proposed
2-Pole Wood Suspension Structures

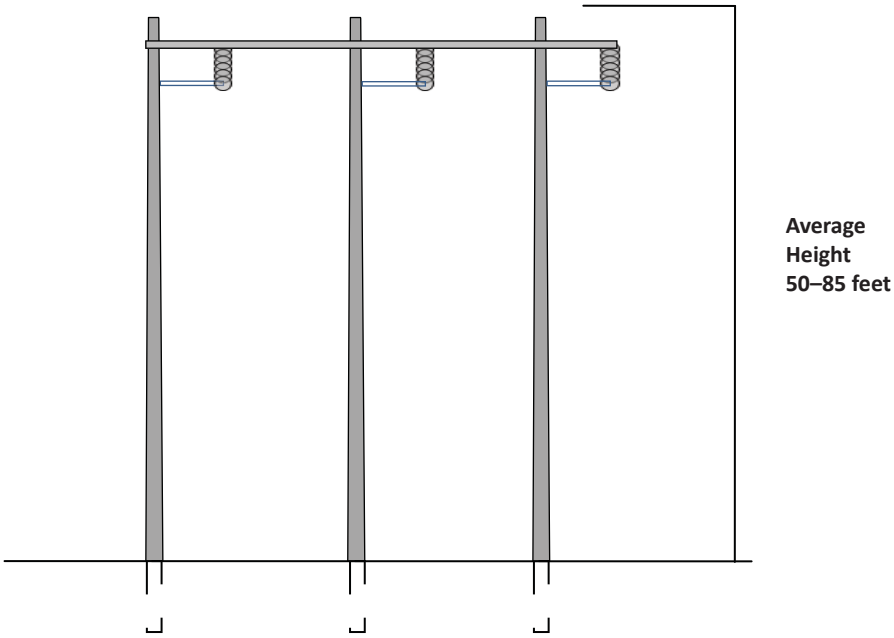

Existing and Proposed
3-Pole Wood Dead-end Structures

00467.10/Graphics (11/10)

ICF INTERNATIONAL

Figure 2-2
Existing and Proposed Wood-Pole Structures
Bandon-Rogue Transmission Line Rebuild Project

This page left intentionally blank.

Access Road Work

Most of the existing transmission line structures are currently accessible by existing access roads, located both within and outside of the right-of-way. These access roads are generally multi-use roads used by a variety of individuals for various purposes. Access roads include residential access roads, county roads, agricultural roads, and forestry roads. BPA has or is acquiring ***easements*** granting permission to use existing access roads, including private drives, to access the existing line and would acquire easements from appropriate landowners for any proposed new access roads.

Some access road work would be needed to provide or improve existing access to structure sites during construction and during ongoing operation and maintenance activities. Road work on existing access roads would ensure access roads are suitable for BPA transmission line equipment. Most road work associated with the Proposed Action would take place between the Bandon Substation and Line Mile 33, because most of the access roads in need of work are currently being upgraded as part of the Fairview-Rogue Transmission Line Access Roads Maintenance Project. (For more information, see the discussion of cumulative projects in Appendix B).

The proposed access road work would include new road construction, road reconstruction, improvement of existing access roads, gate installation or replacement, and work associated with stream crossings. Stream crossing work would include ***culvert*** installation or replacement, cross-drain culvert installation, one bridge replacement, and improvements to an existing ***ford***.

New access roads would be constructed totaling approximately 0.7~~8~~ mile. One access road would be constructed to provide access in a new location because the existing access road location is too steep. The other new access roads would be constructed to access the 19 additional structures. Access to the remaining new structures would be provided by existing access roads.

Road reconstruction involves reconstructing the road base and bed. Some of the access roads requiring reconstruction are in such bad condition they are impassable during wet weather. Approximately ~~16.0~~15.4 miles of access roads would be reconstructed.

Road improvement is less extensive than road reconstruction. It involves work to the existing access road surface. Approximately ~~30.1~~29.9 miles of access roads would be improved.

Gates would be installed or replaced, as needed, to discourage unauthorized access to the transmission line corridor.

New culverts would be installed in ~~eight~~ two locations. One of the new culverts originally proposed that would replace an existing ford has been changed to a bridge installation. It~~and~~ would be designed using National Marine Fisheries Service (NMFS) (2008) criteria for anadromous fish passage. This is the only new ~~culvert~~ bridge that would be designed for fish passage, because it is the only one on a stream with historical or current populations of coho salmon or the potential for coho salmon presence. The ~~remaining~~ two new culverts would not need to provide fish passage and would be sized to meet hydrologic conditions (generally 36 inches in diameter). The determination of whether to design culverts to meet fish passage

criteria was based on existing information, discussions with NMFS and Oregon Department of Fish and Wildlife (ODFW) staff in April 2010, and subsequent field work conducted by ODFW fish biologists.

Culvert replacement would occur in ~~32~~ 33 locations to replace culverts that have been damaged. ~~Four~~ Two of the proposed culvert replacements, one in a tributary to Hubbard Creek and one in Bagley Creek, would be designed using NMFS criteria for fish passage. ~~One~~ The additional culvert that was originally proposed to meet ODFW fish passage criteria to ensure safe passage of native fish is not longer proposed, because BPA was unable to negotiate an easement to use this road. Two other culvert replacements, originally proposed, that were designed to meet NMFS criteria are no longer proposed. In one case BPA could not meet NMFS criteria based on the 13% slope and in the other case that crossing is not needed by BPA. Culverts at the remaining locations would be sized depending on hydrologic conditions.

Cross-drain culverts would be installed or replaced in selected locations to help channel water away from the access road and to provide adequate drainage, prevent road erosion, and reduce the chance of mass failure. Replacement cross-drain culverts would be installed where existing cross drains are damaged and/or not functioning and in other areas, as needed.

One existing ford would also be improved, because it currently cannot support passage of construction vehicles. The ford is within a swale that drains to Indian Creek and is used by a dairy farmer for access to livestock. Because the swale leads to wetlands with potential overwintering habitat for juvenile coho salmon, the improvements would be designed to enable safe fish passage.

~~One bridge~~Bridge work would include ~~be replaced~~ replacement of one bridge and construction of a new bridge to replace an existing ford. The bridge replacement would be done to ensure ~~it~~ that the existing bridge is structurally sound enough for safe passage of heavy construction equipment. Because the stream channel (tributary to Willow Creek) at the bridge crossing is composed of bedrock ledges on either side of the waterway, replacement of the bridge would not require instream work. The existing steel-plate bridge would be lifted up and removed and a new, stronger steel-plate bridge would be lowered in place using existing footings. The new bridge would be constructed to replace an existing ford in Indian Creek. The new bridge design would meet NMFS fish passage criteria.

Vegetation Management

Vegetation Clearing

Although BPA conducts periodic vegetation management activities within the existing Bandon-Rogue transmission line corridor as part of routine maintenance, BPA would conduct additional vegetation clearing as part of the Rebuild Project. Vegetation removal ensures that conductors do not sag too close to vegetation. When vegetation comes too close to conductors, the electricity can jump (arc) from the conductor to the vegetation. This can be very dangerous to humans and wildlife in the surrounding area and can cause fires and ***outages***. In order for construction equipment to access work sites for structure removal and structure replacement, some vegetation would be removed in the vicinity of structures. Because trees do not generally grow in the right-of-way, mostly brush and small trees would be cleared. At culvert work sites,

some riparian vegetation would be cleared to access work sites, including some trees, generally red alder.

Vegetation would be cleared along existing transmission line access roads (brushing), as needed. Brushing would be done to maintain a clear travel corridor approximately 20 feet wide. On either side of the 14-foot-wide access road bed, an area approximately 3 feet wide by 20 feet high would be brushed. Most access roadsides have been previously disturbed during the initial access road construction and subsequent maintenance. Most of the vegetation that would be removed along access roads consists of shrubs and saplings.

Danger Tree Removal

Some danger tree clearing would occur as part of the Proposed Action. A danger tree is a tree located outside the right-of-way that is a current or future hazard to the transmission line. Danger trees can be either stable or unstable. A tree would be identified as a danger tree if it is likely to make contact with BPA facilities if it were to fall, bend, or grow within the space that could be occupied by the conductor, either when at rest or when swinging as a result of winds.

A total of 587 danger trees have been identified for removal. Danger tree species include Douglas-fir, hemlock, -Sitka spruce, shore pine, myrtlewood, and red alder and various types of cedar. Approximately half of the trees that would be removed are Douglas-fir. The size of danger trees, measured in inches as diameter at breast height (dbh), varies from less than 8 inches to 40 inches. Forty of the danger trees are smaller than 8 inches dbh. Most danger trees are distributed along the transmission line individually or in small clusters, occurring predominantly in the southern third of the corridor.

2.1.2. Construction Activities

<u>Removal of Existing Structures</u>

Wood-Pole Structures

Removal of existing structures would involve excavating around the structure bases, and then using a boom crane to pull the structures out and onto the ground to be hauled away on a line truck. Some shrubs and small trees in the right-of-way might need to be cleared to allow equipment and machinery to access the structures. Clearing for better access would not include the removal of mature trees, because no mature trees are located near structures within the existing right-of-way.

At most structure sites, structure removal activities could disturb an area up to 100 feet by 100 feet (0.2 acre). In or near sensitive habitats, it might be possible to reduce the disturbance area to 50 feet by 50 feet per structure (approximately 0.06 acre). In sensitive areas, such as wetlands or near fish-bearing streams, staking or flagging would be installed to restrict vehicles and equipment to designated routes and work areas.

Conductor and Overhead Ground Wire

The conductor and overhead ground wire would be removed by reeling the wires onto large spools using a large truck called a puller. The removed conductor and ground wire would be transported to a metal salvage for recycling.

Installation of New and Existing Structures

Equipment used for removing and installing wood poles and other structure components would include flatbed trucks, line trucks with boom cranes, backhoes, augers, and bucket trucks.

Wood-Pole Structures

All existing wood-pole structures would be replaced and some new structures would be added to the transmission line. Existing structure components (i.e., ***structure cross arms***, ***insulators***, and ***dampers***) also would be replaced, except for cross arms in some instances. During structure replacement, the components would be inspected and those in good condition reused.

New and replacement wood-pole structures would be brought to the structure sites from the ***staging areas*** by flatbed truck. New holes would be augered, and existing holes reaugered, to about 10 feet in depth with an auger on a drill rig. The structures would be lifted by crane into position and placed into the holes. Holes would be backfilled with excavated material and gravel. At most structure sites, any additional soil removed by the auger that is not used for backfilling would be spread evenly around the structure bases for stability. At structure sites within wetlands, the augered soil would be removed from the site and either used at the base of a nearby structure that is not in wetlands or disposed of in a landfill that is permitted to accept such material.

Guys

Guy wires and underground ***guy wire anchors*** to support new structures would be installed, as required. If guy wires are present at a structure site and need to be replaced, a hole would be excavated at the location of the guy wire anchor, and the old guy wire would be cut off. Depending on the location, the guy wire anchor would be left or removed. Holes for new guy wire anchors would be dug with either an auger or a backhoe, and a new guy wire and anchor would be placed in the same location. Guy wire anchors would be set in crushed rock, and the remainder of the hole backfilled with native material. In wetlands, it may be possible to use a type of guy anchors that screws into the ground and would not require excavation.

Conductor

Conductor would be installed in segments or pulling sections along the length of the transmission line. Pulling sections are typically no more than 25 structures long. ***Pulling sites*** and ***tensioning sites*** are located at the beginning and end of each identified pulling section. These sites serve as staging areas for locating the equipment (i.e., puller and tensioner) used to install the conductor. A puller typically consists of reels to hold the segment of conductor wire that is being pulled through the structures. The tensioner is a large piece of equipment that also has many reels through which the conductor wire is fed to get the proper tension after it has been strung on the transmission line.

The conductor is typically installed through the structures in a sequential process with several stages. A helicopter is generally used to pull a ***sock line*** (a pulling rope) through the structures, which is then connected to a ***hard line***. The hard line is a stronger wire that is used to pull the conductor through the structures. Once the conductor is in place, the tensioner is used to set the proper tension in the conductor, which is then securely clipped into all the structures. Because the new conductor is a three-phase conductor (i.e., it consists of three phases or wires), the helicopter would need to visit each structure three times. Each visit would last for less than 10 minutes. Therefore, stringing each line mile would take about 3 hours, and stringing the entire transmission line would take up to 1 month. Overhead ground wires would be installed using a similar process.

Counterpoise

If replaced, the new counterpoise wires would be buried at the base of the structure, extending out approximately 100 feet on either side of the structure base. Generally, four wires are buried. The placement of counterpoise wires could be adjusted to avoid sensitive areas, if needed. The wires would be buried 1 to 3 feet below the ground surface using a narrow-width trencher or a backhoe. If there are areas where bedrock is at or near the surface, the wires would be laid on the surface and buried with loose aggregate.

Access Road Work

All proposed access road work would occur within the 50-foot-wide access road easements. The standard width of the travel surface would be established at 14 feet, although some areas could be wider to allow vehicles to negotiate curves or bends in the road. Approximately 2 feet on either side of the road may be used for ditches, side-casting and road ditch out-sloping, and rolling dips and/or other related construction activities. The area disturbed by access road work would extend no more than 15 feet beyond either side of the existing road surface. Table 2-3 contains a list of equipment that could be used for road work.

Table 2-3. Equipment Used in Access Road Work

Equipment Type	Equivalent Caterpillar Model	Fuel Type
Bulldozers	D5K	Diesel
Excavators (large and small)	328D LCR	Diesel
Dump trucks and other large trucks	NA	Diesel
300,000-pound crane	NA	Diesel
Road grader	12M	Diesel
Roller compacter	CP56	Diesel
Backhoe	450E	Diesel
Work trucks	NA	Diesel/gas

An excavator could be used to grub out some of the smaller shrubs growing at the immediate road surface edge. Soil disturbance and removal would be minimized as much as possible during

vegetation removal. The use of an excavator is preferred to large mowers or brush cutters (e.g., brush hogs) for removing vegetation. Mowing machines are not well suited to this project, because they are too large for the size of the roads and are not as precise as excavators. Any larger limbs growing into the roadway would be cut manually with a chainsaw.

Approximately 0.~~8~~ 7 mile of new access roads would be built to access structures. New road construction tends to progress slowly because of the amount of material that has to be imported. Construction of new roads involves clearing vegetation, forming and grading the road base, and placing road base rock. Some areas may require installing drainage structures such as cross drains and drain dips to manage water. Roadway ditches may need to be shaped. Stream crossing structures may also be needed.

Approximately ~~16.0~~15.4 miles of existing access roads would be reconstructed. Road reconstruction also tends to progress slowly due to the amount of material that has to be imported and because more substantial modifications to the existing road base (compared to road improvements) may be required. Work associated with reconstructing roads would be similar to the construction of new roads.

Approximately ~~30.1~~29.9 miles of existing access roads would be improved. Road improvement work tends to progress more quickly than road reconstruction or the construction of new roads. Work associated with improvements may include vegetation removal at discrete locations, light blading and shaping the existing road base, and the placement of road surface rock. Existing functioning culverts and ditches would likely be cleaned and drain dips could be installed as needed. Damaged culverts or cross drains would be replaced.

Restoration of Areas Disturbed by Construction

All areas disturbed by construction activities, except permanent access road surfaces, would be reseeded with a native seed mix, a seed mix recommended by ODFW appropriate for the geographic area, or a seed mix as agreed upon with landowners. The original grade and drainage patterns in sensitive areas would be restored to the greatest extent possible.

Removal of Danger Trees

Danger trees would be felled with a chainsaw and branches would generally be lopped and either scattered or chipped. If chipped, the chips would be broadcast. How trees are felled and disposed of depends on the location of the trees and agreements with landowners. Because danger trees are the property of the landowner, they are free to dispose of the trees as they wish. BPA would coordinate, as appropriate, with landowners regarding the removal of danger trees.

Staging Areas

Two to three temporary staging areas would be established along or near (within 10 miles, if possible) the right-of-way. Staging areas would be used to store and stockpile new and removed structure materials and conductor, trucks, and other equipment. The size of the staging areas would be based on the types of sites available for lease and the size needed to accommodate materials and equipment. Each staging area could be up to 30 acres in size. Staging areas are generally existing large, level, paved sites in commercial or industrial areas. The construction

contractor would identify potential areas for lease prior to construction. BPA would complete any site-specific environmental review needed once the locations are determined.

Construction Schedule

The schedule for project construction depends on the completion and outcome of the environmental review process. Assuming BPA determines that a FONSI can be prepared for the Proposed Action and a decision is made to proceed, project construction would likely begin ~~by~~ in May 2011. It is anticipated that major construction activities would be completed ~~by~~ in November 2011. Ongoing stabilization of work areas, monitoring, clean up, and other project-related actions could continue through December, if needed. The total estimated duration of project construction is 8 months, with peak construction activities occurring during May through October. ~~If BPA determines that an EIS is necessary, this anticipated construction schedule would likely be delayed by about 2 years due to the time needed to complete the EIS process.~~

2.1.3. Operation and Maintenance

Ongoing operation and maintenance of the rebuilt transmission line would be essentially the same as for the existing transmission line. The transmission line would continue to be operated at the current voltage (115 kV). BPA would conduct inspection and maintenance, when needed. Typical maintenance activities include insulator replacement, vegetation maintenance, and emergency repairs. Although emergency repairs, including possible replacement of structures or other equipment, would occasionally be needed, it is anticipated that the rebuilt transmission line would require less frequent emergency maintenance and on a smaller scale than under existing conditions.

Vegetation would also be cleared periodically during ongoing operation and maintenance to maintain access to structures, control noxious weeds, and keep vegetation at a safe distance from the conductor. This could include removal of danger trees, as discussed above. Vegetation maintenance would be guided by the program identified in the *Transmission System Vegetation Management Program Environmental Impact Statement* and the *Transmission System Vegetation Management Program Record of Decision* (Bonneville Power Administration 2000a and 200b). The vegetation management program includes ongoing consultation with landowners and others concerning vegetation management activities. Vegetation management methods could include manual methods such as hand pulling, clipping, and using chainsaws; mechanical methods such as using roller-choppers and brush hogs; and/or chemical methods including herbicide use.

2.2. NO ACTION ALTERNATIVE

The No Action Alternative assumes that BPA would not rebuild the transmission line and would continue to operate and maintain the existing transmission line. Construction activities associated with the Rebuild Project would not occur, and the reliability and safety concerns that prompted the proposal for action would persist.

Because of the deteriorated condition of the existing transmission line, it is likely that more frequent maintenance and more frequent access would be required to maintain it as materials continue to deteriorate and fail over time. Given the poor condition of some of the access roads,

it is possible that the access road work proposed under the Rebuild Project would be funded and carried out as an operations and maintenance project in the future, independent of rebuilding the transmission line.

2.3. ALTERNATIVES CONSIDERED BUT ELIMINATED FROM DETAILED STUDY

The Rebuild Project would take place within the existing transmission line corridor. The basic design and function (structure design, location of most structures, and operating voltage) would not change. BPA considered the option of removing the existing transmission line and building a new line in a new corridor. However, constructing the transmission line in a new corridor would result in much greater environmental impacts (e.g., through vegetation clearance, wildlife habitat disturbance, and visual impacts) as compared to simply rebuilding the transmission line within the existing right-of-way. Building a new transmission line in a new corridor also would be significantly more expensive than the more straight-forward Rebuild Project. Finally, through environmental analysis conducted for the Proposed Action, no major issues have been identified that would merit a full rerouting of the Bandon-Rogue transmission line. Potential rerouting alternatives thus were considered but eliminated from further study.

Construction of an underground transmission line was suggested as a possible alternative during the public scoping process. Underground construction would require extensive ground disturbance that would be significantly more expensive and result in substantial ground disturbance, likely resulting in considerable environmental impacts. The steep terrain and many stream crossings would make underground construction of the transmission line, and subsequent maintenance, extremely difficult and very expensive. Therefore, building an underground transmission line was considered but eliminated from further study.

2.4. COMPARISON OF ALTERNATIVES

Table 2-4 compares how well the Rebuild Project and No Action Alternative meet the purposes of the project as defined in Chapter 1, Purpose of And Need for Action. Detailed analysis of the environmental impacts is presented in Chapter 3.

Table 2-4. Comparison of How the Proposed Action and No Action Alternative Respond to the Project Purpose

Purpose	Proposed Action	No Action
Meet transmission system public safety and reliability standards set by the National Electrical Safety Code	Would meet public safety standards (conductor distance from ground) and would meet service standards by enabling prompt maintenance during outages	Maintenance of service during outages could take longer
Minimize environmental impacts	Construction impacts would be low to moderate, primarily temporary, and could mostly be mitigated: see Table 3-1 for a summary of environmental impacts on various resources and the subsequent sections of Chapter 3 for a full discussion of impacts and mitigation.	Would avoid construction impacts but maintenance impacts would increase as existing structures and access roads deteriorate; see Table 3-1 for summary and Chapter 3 for details
Improve safety for transmission line workers	Would reduce much of the need for maintenance during severe weather conditions Deteriorating and unstable structures would be replaced with stable structures	Would continue risks to worker safety from maintenance during severe weather conditions and from deteriorating and unstable structures
Demonstrate cost effectiveness	Environmental review, design and engineering, and construction costs estimated at $22 million Would reduce maintenance costs	Would avoid construction costs Would incur maintenance costs which, over time, could be higher than under the Proposed Action
Use facilities and resources efficiently	Would avoid continued use of financial and human resources on maintenance of unsound structures and access roads in poor condition	Existing unsound structures and access roads in poor condition would require more maintenance, an inefficient use of resources

This page left intentionally blank.

Chapter 3
Affected Environment, Environmental Consequences, and Mitigation

3.1. INTRODUCTION

This chapter evaluates the potential impacts of the Proposed Action and No Action Alternative on human and natural resources to determine whether the Proposed Action has the potential to cause significant environmental effects. For each resource, the chapter describes the existing environment that would be affected by the alternatives, the potential environmental impacts of the alternatives, and ***mitigation***[1]. The location of an affected resource may be identified by transmission line structure number and local landmarks. Structure numbers refer to specific existing structures unless otherwise noted.

To evaluate potential impacts from construction, and operation and maintenance activities, four impact levels were used—high, moderate, low, and no impact. High impacts are considered to be significant impacts, whereas moderate and low impacts are not.

Direct, indirect, and ***cumulative impacts*** were evaluated. Direct impacts are those that would occur as a direct result of project construction within the work area and would have an immediate effect on the environmental resource being evaluated. Indirect impacts are those that would occur after project construction or adjacent to the work area. Cumulative impacts are impacts that could occur when considered along with other past, present, and reasonably foreseeable future actions. Other such actions within the project vicinity, including actions being conducted or proposed by BPA in addition to this proposed Rebuild Project, that are considered in the cumulative impact analysis are identified and discussed in Appendix B.

The impacts of the No Action Alternative are discussed in the final part of each resource section. Table 3-1 includes a summary of the impacts for the Proposed Action and the No Action Alternative, described in greater detail in the remainder of this chapter. This table represents the level of impact that would be expected to result after implementation of appropriate mitigation, listed in each resource section.

[1] Terms defined in Chapter 6, Glossary, are shown in bold, italicized typeface the first time they are used.

Table 3-1. Summary of Impacts of the Proposed Action and No Action Alternative with Implementation of Appropriate Mitigation

Environmental Resource	Proposed Action	No Action Alternative
Land Use and Recreation	Localized and temporary disruption of agricultural operations, forestry, recreation, transportation access, and residential use associated with construction, including minor delays and interruptions of local traffic and generation of noise and dust. Less than 2.0~~1~~ acres of land converted to new access roads from its current use~~.~~ Impacts would be **low to moderate** depending on location and duration of the disruption.	Infrequent, temporary disruption of agricultural operations, forestry, recreation, transportation access, and residential use associated with maintenance of structures and access roads. Impacts would be **low to moderate**, depending on location and duration of disruption.
Visual Quality	Temporary visual impacts associated with construction activities affecting sensitive viewer groups, including motorists, residents, and recreationists, would be **low to moderate.** Permanent visual impacts resulting from permanent changes to the transmission line would be **low** for most sensitive viewer groups with the exception of impacts on residents, which could be **low to moderate** depending on their view of the rebuilt transmission line.	Maintenance and repair of structures and access roads and vegetation clearing, including danger tree removal would have the potential for **low to moderate** temporary visual impacts depending on the proximity of these activities to sensitive viewer groups and the duration of the disturbance.
Geology and Soils	Increased levels of temporary erosion and sedimentation from vegetation clearing and soil disturbance during and immediately after construction. Soil compaction by heavy equipment during construction with potential to degrade soil structure. Localized soil disturbance, minor sheet erosion, and compaction during operation and maintenance. Impacts on soils would be **low to moderate** during and shortly after construction, then at a **low level** as vegetation becomes reestablished. Impacts from landslide hazards would be **low.**	Continued or slightly increased levels of localized soil disturbance, erosion, and compaction associated with maintenance and repair of structures and access roads. Impacts on soils and geology would be **low to moderate** depending on the extent of disturbance.

Environmental Resource	Proposed Action	No Action Alternative
Vegetation	Temporary removal/crushing of vegetation on up to 62 acres for structure work and temporary or permanent removal of vegetation during access road work on existing and new access roads, a **moderate** impact. Potential impacts from the introduction and spread of invasive weed species, a **moderate** impact with implementation of weed control measures. Removal of 587 danger trees, a **low** impact. Implementation of the mitigation measures to prevent harm to known western lily populations would result in a **low** impact, with potential beneficial effects on habitat from weed control. Because use of best management practices would help avoid or limit movement of soils between construction work areas, impacts from the inadvertent spread of the Port-Orford--cedar root disease pathogen would be **low to moderate**,	Temporary removal/crushing of vegetation in maintenance work areas, a **low** impact. Continued or slightly increased levels of vegetation removal, including periodic danger tree removal outside the right-of-way and cutting of tall-growing vegetation within the right-of-way, a **low** impact. Potential impacts from the introduction and spread of invasive weed species, a **moderate** impact with implementation of weed control measures.
Waterways and Water Quality	Temporary impacts on water quality from increases in turbidity caused by increased erosion and sedimentation associated with construction activities would be **low to moderate** depending on the location and extent of disturbance and are expected to return to previous levels or improve over time. Potential **low** impacts from chemical spills (e.g., petroleum products used during construction). Indirect impacts on water quality from increased temperature associated with vegetation clearing and danger tree removal would be **low to moderate**.	Periodic increases in turbidity caused by increases in erosion and sedimentation associated with maintenance and repair of structures and access roads, **low to moderate** impacts depending on the location and extent of disturbance. Potential **low** impacts from chemical spills from equipment. Indirect impacts on water quality from increased temperature associated with vegetation clearing and danger tree removal would be **low to moderate**.

Environmental Resource	Proposed Action	No Action Alternative
Wetlands	Placement of less than 0.~~5~~ 2 acre of permanent fill from structure installation and access road work would result in loss of wetland functions. Placement of less than ~~1.0~~0.3 acre of temporary fill in wetlands from structure installation and access road work would result in some loss or impairment of wetland functions during and after construction until vegetation is reestablished. Impacts on wetlands would be **low to moderate.**	Potential for **permanent or temporary fill of** wetlands associated with maintenance and repair of structures and access roads, resulting in temporary or permanent loss of wetland functions. Maintenance activities would result in **low to moderate** impacts on wetlands, depending on the type of work, quality of wetland, and extent of impacts.
Floodplains	Direct impacts from structure removal and replacement and access road work within floodplains could result in minor soil compaction and erosion, a **low** impact. Installation of structures and access road work near floodplains could cause temporary erosion and deposition of sediments in floodplains, a **low** impact.	Maintenance and repair of the limited number of structures and access roads within or near floodplains and removal of vegetation would be a **low** impact.
Fish	Localized and temporary disturbance of fish and prey organisms from construction noise, activity, and increase in turbidity; impacts related to sedimentation are expected to be **moderate** in intensity at first, then decreasing to **low** as sedimentation decreases. Potential degradation of fish habitat from increases in water temperature due to some vegetation removal near streams, a **low** impact. Potential fish mortality or injury during implementation of fish salvage plans and work area isolation for culvert work at two locations, but with implementation of mitigation measures to avoid or minimize incidental take; impacts would be **moderate**. Some beneficial effects resulting from improvement of fish passage at ~~six~~ three locations and improvement of project access roads resulting in less ongoing sedimentation.	Periodic temporary disturbance of fish associated with maintenance and repair of structures and access roads. Impacts would be **low to moderate** depending on the location of the disturbance. Potential degradation of fish habitat from increases in water temperature due to vegetation removal near streams, a **low to moderate** impact, depending on the amount of vegetation removed and proximity to streams.

Environmental Resource	Proposed Action	No Action Alternative
Wildlife	Temporary loss of wildlife habitat in construction areas and displacement of wildlife from work areas, a **moderate** impact. Minimal loss of permanent habitat from installing 19 new structures and constructing less than 1 mile of new access roads, a **low to moderate** impact. Degradation of wildlife habitat from potential loss of native species and invasion by weed species during construction and danger tree removal would be a **low to moderate** impact. Potential for avian collisions would be minimized by the placement of bird diverters on conductor that span~~s~~ six waterways, a low to **moderate** impact. Impacts on eagles, northern spotted owl, and marbled murrelet after mitigation would be **low,** because impacts on nesting would be minimal and no critical habitat would be affected.	Periodic temporary disturbance and displacement of wildlife and loss or degradation of habitat associated with maintenance and repair of structures and access roads and vegetation management, including danger tree removal. Impacts would be **low to moderate** depending on the location of the disturbance.
Cultural Resources	Potential impacts on known and previously undocumented archaeological resources during construction would be **low to moderate** depending on the extent of the disturbance and loss, with implementation of avoidance and mitigation measures.	Potential impacts on known and previously undocumented archaeological resources during maintenance activities would be **low to moderate,** depending on the extent of the disturbance and loss, with implementation of avoidance and mitigation measures.
Socioeconomics and Public Facilities	Temporary decrease in housing availability during construction, a **low** impact, and no long-term changes in population or housing demand. Some temporary disruption of agricultural activities during construction, disruption of travel along some construction access roads, and temporary property impacts, a **low** impact. Overall economic impacts would be **beneficial, but low**. No disproportionate impacts on environmental justice populations.	During maintenance activities, some minor and temporary disruption of agricultural activities and disruption of travel along some construction access roads, a **low** impact.

Environmental Resource	Proposed Action	No Action Alternative
Noise	Temporary increases in ambient noise from construction; impacts would be **low to moderate** depending on the proximity of construction to residents and recreationalists. Low levels of corona noise from operation of the rebuilt transmission line, a **low** impact.	Occasional temporary increases in ambient noise associated with periodic maintenance of structures and access roads; impacts would be **low to moderate** depending on the proximity of maintenance activities to residents and recreationalists. Corona noise would continue similar to existing conditions, a **low** impact.
Public Health and Safety	Increased risk to public and workers due to injury from high-voltage equipment, use of construction equipment, and exposure to hazardous materials would be avoided through implementation of appropriate safety procedures, therefore a **low** impact. Electromagnetic field levels of rebuilt transmission line would be similar to the existing line, a **low** impact. Electromagnetic interference with electrical equipment would remain very low, similar to existing conditions, a **low** impact.	Increased risk to public and workers due to use of vehicles and equipment would be avoided through implementation of appropriate safety procedures, therefore a **low** impact. Electromagnetic field and electromagnetic interference would remain very low, a **low** impact.
Air Quality	Temporary increases in criteria pollutants from vehicle and equipment use and temporary increases in dust and particulates, during construction, a **low** impact. Corona emissions of rebuilt transmission line similar to current levels of existing transmission line, a **low** impact.	Temporary and localized increases in criteria pollutants from vehicle and equipment use and temporary increase in dust and particulates, near maintenance activity work sites, a **low** impact. Ongoing low corona emissions of existing transmission line, a **low** impact.

Environmental Resource	Proposed Action	No Action Alternative
Greenhouse Gas (GHG) Emissions	Slight increases in GHG releases: total direct GHG emissions estimated to be up to 9,900 metric tons of carbon dioxide equivalent (CO_2e) for transportation-related emissions and up to 120 metric tons of CO_2e per year for operations and maintenance. This level of direct emissions is below the U.S. Environmental Protection Agency mandatory reporting threshold, a **low** impact. Total GHG emissions resulting from land use changes estimated as 12,100 metric tons of CO_2e, a **low** impact.	Continued low levels of transportation-related direct GHG emissions from periodic maintenance of structures and access roads, a **low** impact.

This page left intentionally blank.

3.2. LAND USE AND RECREATION

3.2.1. Affected Environment

The study area for land use and recreation includes the existing right-of-way, danger tree removal area adjacent to the right-of-way, and the surrounding access road system that extends outside of the right-of-way from Brush Creek north to the Bandon Substation, and lands that extend 0.25 mile beyond these project work areas. Land uses within the study area generally consist of forestry, agriculture, recreation, or residences, and are shown in Figure 3.2-1. These land uses, transportation facilities, and applicable land use plans are discussed below.

Forestry

The South Coast is home to some of the world's most productive temperate forests. Much of the land to the east of the study area is federally owned forest land, though the right-of-way itself crosses only one federal parcel, owned and managed by the BLM, at Line Mile 32. Forest lands in the study area are widespread and represent the dominant land use type crossed by the transmission line corridor south of the Coos-Curry county line. Densely forested areas occur between the Port Orford Substation (Line Mile 25) and Humbug Mountain State Park (Line Mile 32), and between Euchre Creek (Line Mile 40) and Edson Creek (Line Mile 45).

There are approximately 890,000 acres of non-federally owned forest land in Coos and Curry counties. Private timber products from lands in Coos and Curry counties in 1997 were valued at $239 million (Oregon State University Extension Service 2010a). According to the *Curry County Comprehensive Plan* (Curry County ~~2000~~2009), forest lands comprise approximately 90% of the county's area, and forest products are the single largest component of the county's economy.

Agriculture

Except for the low-lying lands in the northern portion of the transmission line corridor near Bandon, steep and uneven terrain makes the land in the study area unsuitable for large-scale crop cultivation. Agricultural activities in the study area consist primarily of cranberry farming and livestock grazing.

Cranberry production is an important economic activity in Coos and Curry counties. Approximately 99% of Oregon's cranberry production occurs in the South Coast region, and Oregon cranberries are highly valued by national processors. As of 2006, Coos County had approximately 1,680 acres engaged in cranberry cultivation, and Curry County had approximately 1,000 acres (Oregon State University Extension Service 2010b).

The right-of-way crosses approximately 2.1 miles of cranberry bogs. The highest concentration of cranberry bogs occurs within Coos County and is scattered along and within Line Miles 1 through 4 with another concentration occurring further south between Line Miles 6 and 8. In Curry County, the transmission line corridor crosses only one area with~~-~~ cranberry bogs near existing Structure 22/2. Existing structures are primarily located on the berms between bogs.

Grazing is an important contributor to agricultural income within the South Coast region. The *Curry County Comprehensive Plan* (Curry County ~~2000~~2009) reports that cattle ranches are the

top contributors to the county's agricultural income, accounting for an annual value of approximately $1.7 million. Sheep ranching and dairy farming are the third and fourth largest contributors, respectively. The majority of grazing lands begins around Line Mile 9, continuing south into Curry County. Grazing lands consist of scattered grazing areas for cattle and sheep. An organic dairy is located on the banks of the Elk River, adjacent to the Port Orford Substation.

Recreation

Five recreational facilities occur within or are accessed exclusively by roadways within the study area. These recreational facilities consist of both public and private lands and facilities as discussed below and shown in Figure 3.2-1.

Humbug Mountain State Park

The transmission line corridor passes through the eastern edge of Humbug Mountain State Park between Line Miles 31 and 32. The State Park is located along U.S. Highway 101, approximately 5 miles south of Port Orford. It features a campground with both tent and RV sites, a day-use area with picnic tables, restrooms, and trails with interpretive signage. Trailheads in the campground provide visitors with access under U.S. 101 to a beach area and the summit of Humbug Mountain (elevation 1,756 feet). The day-use area also includes a gazebo with electricity, water, a sink, and a barbecue grill (Oregon Parks and Recreation Department 2010).

Three existing transmission line structures are located within the State Park boundaries. The transmission line and one structure are visible from the State Park gazebo and lawn area at a distance of approximately 0.25 mile.

Bandon Crossings Golf Course

Bandon Crossings, located 5 miles south of Bandon, is a privately owned, 18-hole golf course. It was constructed in 2006 and is open to the public. The club offers instruction, including both clinics and private lessons, and is available for private events (Bandon Crossings 2010). The transmission line passes immediately north of the golf course's northern property line, and Structures 5/5, 5/6 and 5/7 are clearly visible from most locations on the course. A copse of trees in the center of the course screens the transmission line and wood-pole structures from the clubhouse and some of the southern holes.

Cedar Bend Golf Course

Cedar Bend Golf Course, located 10 miles north of Gold Beach on Cedar Valley Road (County Road 515), is a privately owned, 9-hole golf course that is open to the public. The club offers RV parking for a fee and hosts a series of annual events and tournaments (Cedar Bend Golf 2010). While the transmission line does not cross the golf course, it passes within 100 to 200 feet of the course and is visible from several locations on the property.

BPA Proposed Bandon-Rogue No. 1 Transmission Line Rebuild Project

Land Use

Recreation Facility
BPA Substation
Project Line
BPA Transmission Lines
Major Rivers & Creeks
County Boundary

N W E S

0 1.5 3 6 Miles

08/06/2010

BONNEVILLE POWER ADMINISTRATION

Figure 3.2-1

This page left intentionally blank.

Edson Creek and Sixes River Recreation Sites

BLM maintains two recreation sites, Edson Creek and Sixes River, on Sixes River Road in northwestern Curry County. Both sites have picnic tables, fire rings, and campsites (U.S. Bureau of Land Management 2010a). The Edson Creek Recreation Site is located approximately 3 miles east of the transmission line, and the Sixes River Recreation Site is approximately 10 miles east of the transmission line. While both of these sites are outside the study area, the only means of access is Sixes River Road, which crosses under the transmission line near Structure 21/6.

Residential Use

Residences are scattered throughout the study area. Some residences are directly adjacent to the transmission line corridor. Concentrations of residences within the study area occur at the following locations:

- along Bills Creek Road near the Bandon Substation,
- along Pacific View Road southeast of the Langlois Substation (Line Mile 15),
- along Crystal Creek Road near Structures 20/3 and 20/4,
- on Elk River Road east of the Port Orford Substation, and
- along Cedar Valley Road (County Road 515) near Structures 41/2 to 42/1.

With the exception of the homes near the Bandon Substation, these are rural residences on large lots, located outside of cities or towns. Much of the residential development in the area occurred after construction of the transmission line, but some residences predate the initial construction.

Transportation

The 46-mile-long transmission line corridor closely parallels U.S. 101, the principal coastal transportation route through California, Oregon, and Washington. Most of the access roads to the transmission line corridor begin at U.S. 101. It is heavily used by tourists, local residents, and logging trucks. The average daily traffic volume is 6,100 vehicles near Bandon on the north end of the corridor and 2,500 vehicles near the south end of the corridor (Oregon Department of Transportation 2010a). U.S. 101 and local roads are mostly two lanes in the project vicinity.

Plans and Policies Affecting Land Use

The transmission line corridor is located in an area subject to the Coastal Zone Management Act (CZMA), which is executed in Oregon via the Oregon Coastal Management Plan (OCMP). For more information about the CZMA and OCMP as well as a discussion of the local land use plans and policies, see Chapter 4, Environmental Consultation, Review, and Permit Coordination, of this EA.

3.2.2. Environmental Consequences—Proposed Action

Forestry

The Proposed Action could result in direct impacts on forest resources from tree removal associated with vegetation clearing for construction of new roads, removal of danger trees, and vegetation management during operation and maintenance activities. New road construction would mostly require the removal of seedlings and saplings and would not be located on forest

lands. Danger tree removal and periodic vegetation maintenance would affect only limited areas and would be spread along the length of the 46-mile-long transmission line. Because tree removal under the Proposed Action would affect a small area relative to the overall timber base within the study area, there would be low impacts on forest lands.

Agriculture

The Proposed Action has the potential to result in direct temporary impacts on agricultural lands from disturbance of soils and livestock and inconvenience to ranchers and farmers. A small area of agricultural lands, less than 1.0~~.6~~ acre of pasture, would be converted to unpaved access roads. Areas where new road would be constructed in pastures include proposed access roads to existing Structures 10/1, 12/1 and 22/4. Project construction activities and operation and maintenance activities have the potential to temporarily conflict with some cranberry production operations and livestock grazing activities. In addition, construction activities could pose a danger to livestock in the area, including increasing the risk of escape and frightening animals.

Construction disruption would be limited to isolated locations and would be short in duration. Disruption from operation and maintenance would be minimal and would be similar to existing conditions. Therefore, impacts on agricultural lands would be low.

Recreation

Although a segment of the transmission line corridor crosses Humbug Mountain State Park, the three structures that occur within this segment would be replaced in their existing locations and no direct loss of recreational facilities or lands would occur. The Proposed Action would result in direct temporary impacts on recreation resources from construction-related disturbance associated with rebuilding the transmission line and operation and maintenance activities. This would occur when construction activities and equipment are visible from several locations in Humbug Mountain State Park, Bandon Crossings Golf Course, and Cedar Bend Golf Course. This could temporarily detract from the enjoyment of some visitors. Visual impacts are discussed in more detail in Section 3.3, Visual Quality, of this EA. Because construction in this area would be brief, direct impacts on recreation would be low.

In addition, although construction activities would not be visible at the Edson Creek and Sixes River recreation sites, construction vehicles and equipment moving along local roads would potentially temporarily delay access to these recreation areas. In particular, because Sixes River Road is the only access from U.S. 101 to the Edson Creek and Sixes River recreation sites, recreational users traveling on Sixes River Road to these areas could be temporarily affected by traffic delays during equipment movement, as well as during temporary construction activities near Sixes River Road.

Because construction in this area would be brief, indirect impacts on recreation would be low.

Residential Use

The Proposed Action has the potential to result in temporary direct impacts on residential land uses during project construction activities associated with rebuilding the transmission line, completing road access work, conducting danger tree removal, and conducting ongoing operation and maintenance activities. Trucks and construction equipment may temporarily block local access to private residences. Construction activities near residences would increase

localized noise and dust levels for a brief period. Disturbance to residents from construction activities would be limited to brief periods and would occur within the existing right-of-way and along existing access road locations. Therefore, these temporary impacts would be low to moderate, depending on the proximity of the construction activities to the homes.

Transportation

The Proposed Action has the potential to result in direct short-term impacts on transportation from increased traffic generated by construction vehicles and disruptions to traffic from temporary single-lane closures. The temporary increase in construction-related traffic would represent a low to moderate increase in daily traffic volume, depending on the setting; however, it is not expected to substantially degrade traffic operation on the local roads. At a few transmission line corridor crossings of local roads, the reconductoring could require single-lane closures in short sections for short periods. Lane closures would result in temporary traffic delays and are not expected to substantially degrade traffic operation at these locations because of their short duration. Therefore, transportation impacts would be low.

3.2.3. Mitigation—Proposed Action

If the Proposed Action is implemented, BPA would implement the following mitigation measures to avoid or minimize impacts on residents and local land uses, including recreational uses. See also Section 3.12, Socioeconomics and Public Facilities, of this EA for additional mitigation measures that relate to land use.

- Develop and distribute a schedule of construction activities to potentially affected landowners along the transmission line corridor to inform residents when they may be affected by construction activities; advertise construction schedule in local newspapers and post in public places customarily used for public notices, such as libraries, post offices, and local government buildings.
- Conduct a preconstruction public meeting and invite landowners to meet with contractors and BPA staff responsible for project implementation in order to receive information and discuss concerns.
- Provide appropriate contact information for contractor liaisons and BPA staff to local residents for any concerns or complaints during construction.
- Develop and distribute a schedule of construction activities to potentially affected farm and timber operators along the transmission line corridor to allow planting, harvesting, or maintenance activities to be scheduled around construction.
- Provide a schedule of construction activities to the owners/managers of potentially affected recreational facilities to allow the owners to advise visitors and appropriately schedule any events that could be adversely affected by construction activities.
- Keep construction activities and equipment clear of residential driveways, to the greatest extent possible.
- Coordinate the routing and scheduling of construction traffic with the Oregon Department of Transportation and Coos County and Curry County road staff to minimize interruptions to local traffic.
- Employ traffic control flaggers and post signs along roads warning of construction activity and merging traffic for temporary interruptions of traffic, where needed.

- Instruct construction contractors to promptly close all gates after entry, to avoid frightening or endangering livestock, and to contact landowners immediately if problems with livestock occur.
- Install vehicle and equipment wash stations ~~(water and compressed air) in each work area~~ to minimize spread of weeds and Port-Orford-cedar root disease, preferably near where pavement ends and gravel or dirt access roads begin, if feasible[1]; ~~mandate~~ use ~~of~~ wash stations ~~for~~ to clean vehicles and equipment prior to entering and leaving each work area; and prohibit discharge of vehicle wash water into any stream, waterbody, or wetland.
- Reseed disturbed areas after construction and regrading are complete, at the appropriate time period for germination, with a native seed mix, a seed mix recommended by ODFW, or a seed mix identified in the *Stormwater Management Manual for Western Washington* (Washington State Department of Ecology 2005), or as agreed upon with landowners for use on their property.
- Monitor seed germination of seeded areas with at least three field visits per year until site stabilization (defined as at least 70% cover by native or acceptable nonnative species) is achieved; if vegetative cover is inadequate, implement contingency measures and reseed to ensure adequate revegetation of disturbed soils.

3.2.4. Unavoidable Impacts Remaining After Mitigation—Proposed Action

Less than ~~1~~2 acres of land would be converted to access roads from its current use, a permanent impact. During construction, potential unavoidable impacts would consist of minor delays and interruptions of local traffic in the project vicinity, short-term generation of noise and dust in or near residential or recreation areas, and temporary interference with forestry or agricultural activities. These short-term impacts would cease once construction is completed and are considered to be low to moderate, depending on the location.

3.2.5. Cumulative Impacts—Proposed Action

Land use in the project vicinity has incrementally changed due to past and present development; this trend would continue, although current land use is not expected to change much in the near future. The cumulative effect of the changes has been to introduce dispersed human development and agricultural uses in an area that is still predominantly coastal shrubland and forests. Road work projects are planned or ongoing in the project vicinity. The Proposed Action would result in similar impacts from road work on residents associated with noise, dust, vegetation clearing, and traffic delays and would add to the cumulative impacts of other road projects in the area. However, because of the temporary and localized nature of the project activities, except for a small amount of new road construction, the contribution of the Proposed Action to cumulative impacts on land use would be considered low.

---

[1] Finding suitable locations for wash stations in all work areas is not possible due to the presence of wetlands, waterways, and steep topography. If wash stations could not be situated along each access road leading to work areas, equipment would be washed prior to entering work areas and as soon as possible after leaving work areas, at the nearest wash station location.

3.2.6. Environmental Consequences—No Action Alternative

Under the No Action Alternative, the existing transmission line would not be rebuilt; therefore, the impacts related to construction of the Rebuild Project would not occur. Operation and maintenance activities would continue and would be similar to existing conditions, as described in Section 2.1.3. Maintenance activities would likely increase as existing structures deteriorate and more structure repair and replacement could be required compared to existing conditions. Maintenance of access roads would be needed, and road work proposed under the Rebuild Project would likely need to take place as an operations and maintenance activity. The maintenance activities would result in low to moderate temporary impacts on land use and recreation, including localized noise and dust, traffic delays, and disruption of activities similar to the impacts described above.

This page left intentionally blank.

3.3. VISUAL QUALITY

3.3.1. Affected Environment

The study area for visual resources includes the right-of-way, land within 0.25 mile of the right-of-way, access roads where work is proposed, and surrounding areas with views of the transmission line. The visual setting in the project vicinity is the Oregon South Coast, which is characterized by forested hills and river valleys near and along the Pacific Ocean. The mountainous terrain, along with varied shoreline conditions, provides high quality scenic views from many locations (Pound Hammer Media 2009).

U.S. 101 is a dominant visual feature in the region that is recognized for its scenic views at many locations along the Oregon coast. The portion of U.S. 101 between Astoria and Brookings has been designated as a National Scenic Byway and All-American Road by the Federal Highway Administration (National Scenic Byways Program 2010); therefore, it is incorporated into ODOT's Scenic Byways Program. In addition to being the primary north-south highway of the region, U.S. 101 is popular with recreational motorists for its exceptional views of the Pacific coastline. U.S. 101 lies mostly outside of the study area, although it passes within 200 feet of the right-of-way near Structure 31/5. In general, U.S. 101 is near Line Miles 14, 31, 32, 36, and 37. In other locations, U.S. 101 is approximately 0.5 mile or further from the right-of-way.

The right-of-way transmission line corridor is a prominent feature in the visual landscape within the study area. In addition to the Bandon-Rogue transmission line, the transmission line corridor contains the BPA Fairview-Rogue transmission line, which has steel lattice structures (Figure 2-1). The Fairview-Rogue structures are larger, taller, and more visible than the Bandon-Rogue structures. The Bandon-Rogue wood-pole structures tend to blend into the rural landscape more than the Fairview-Rogue steel lattice structures, because of their lower height and more natural shape and coloration.

Sensitive viewer groups within the study area include motorists, residents, and people participating in recreational activities. Typical views experienced by these sensitive viewer groups are discussed in greater detail below.

Portions of the Bandon-Rogue transmission line can be seen by motorists from some parts of U.S. 101. In most areas where the transmission line nears U.S. 101, trees and hills obscure the view. The transmission line is most visible from U.S. 101 in the following locations:

- Line Mile 14, near the Floras Creek crossing, between Structure 14/3 and 15/2;
- Line Mile 21, Sixes River crossing, between Structures 21/6 and 22/1;
- Line Mile 36, near Mussel Creek crossing, between Structures 36/6 and 37/1; and
- Line Mile 40, Euchre Creek crossing, between Structures 40/4 and 40/5.

Figure 3.3-1 illustrates a view of the transmission line from U.S. 101, where it crosses the Sixes River. In addition, Structure 31/5 is briefly visible to motorists traveling southbound on U.S. 101 through Humbug Mountain State Park.

Figure 3.3-1. View of Bandon-Rogue Transmission Line from U.S. Highway 101 at Sixes River

Some private residences located near the right-of-way have views of the transmission line. The largest concentration of residences near the right-of-way is along Line Mile 15, where the right-of-way is parallel to a private residential road, Pacific View Road. The right-of-way is near or adjacent to concentrations of homes in the following areas:

- Bills Creek Road near the Bandon Substation,
- Pacific View Road southeast of the Langlois Substation (Line Mile 15),
- Crystal Creek Road near Structures 20/3 to 20/4,
- Elk River Road near Structures 24/7 and 25/2, and
- County Road 515 near Structures 41/2 to 42/1.

Outside of these areas of concentration, the right-of-way is also near various individual residences, though these homes are widely spaced at very low densities. Figure 3.3-2 illustrates a view of the transmission line in a rural residential area.

Figure 3.3-2. View of Bandon-Rogue Transmission Line from Stonecypher Road

The transmission line is visible from three local recreational sites: Bandon Crossings Golf Course, Humbug Mountain State Park, and Cedar Bend Golf Course.

Bandon Crossings Golf Course users have a view of Structures 5/5, 5/6, and 5/7 on the hills to the east of and above the course. The topography of the golf course is relatively flat, with very little tall-growing vegetation to screen visitors from views of the transmission line.

Three structures are located with Humbug Mountain State Park (Structures 31/3, 31/4, and 31/5). The transmission line and one structure are currently visible from the day-use area gazebo and lawn at a distance of approximately 0.25 mile. The transmission line is not visible from the campground or its associated beach area. Figure 3.3-3 illustrates the view of the transmission line from the State Park's day-use area.

Figure 3.3-3. View of Bandon-Rogue Transmission Line from Humbug Mountain State Park Day-Use Area

Structures 41/2 through 42/2 are located immediately west of Cedar Bend Course, a privately owned, nine-hole golf course located 10 miles north of Gold Beach. The transmission line does not cross the golf course, but it is within 100 to 200 feet of the property. The structures are located on a nearby series of hills, making them visible from several locations on the golf course, although from most areas on the course, views of structures are obscured by trees.

3.3.2. Environmental Consequences—Proposed Action

Rebuild Project construction activities would result in temporary and permanent visual changes in the study area. Temporary visual changes would result from the presence of construction equipment and construction activities. Permanent visual changes would result from moving existing structures, installing structures in locations where they previously did not exist, changing structure types (two-pole to three-pole), increasing structure heights, increasing conductor diameter, and constructing less than 1 mile of new access roads (Appendix A). The type and level of visual impacts experienced by sensitive viewer groups from these activities are discussed below.

As described in Chapter 2, Proposed Action and Alternatives, the Proposed Action would result in the replacement of most existing structures in approximately the same location. With the exception of ~~six~~ seven structures, all replacement structures would be within 100 feet of their existing locations. The Proposed Action would require the installation of 19 new structures, which would result in the permanent addition of features to the visual environment. In general,

these new structures would be located in remote portions of the right-of-way and would not cause direct visual impacts on sensitive viewer groups.

Six two-pole structures would be replaced with three-pole structures. While this change would make these structures marginally more visible at long distances, the greatest visual impacts would occur at close range.

Many of the proposed structures would be taller than the structures they are replacing; approximately 68% of the structures would exceed the heights of their existing counterparts by 10 feet or more. As described above, many of the existing structures are low enough that they blend with the surrounding trees and are consequently not visible from great distances. The increase in structure height in some areas could increase the visibility of the transmission line.

The existing conductor has a diameter of approximately 0.6 inch compared to a diameter of approximately 1.1 inches for the proposed conductor. Because of the increased size, the proposed conductor would be visible over greater distances compared to existing conditions. The new conductor would also be more reflective than the existing conductors for a few years, further increasing its visibility. Because the proposed conductor would weather and dull over time, it would become less visible.

To minimize the potential for avian (bird) collisions with the transmission line, spiral bird diverters would be installed on conductor that spans some wide waterways and floodplains frequented by birds, including Aleutian cackling geese, marbled murrelet and other species. Spiral bird diverters are spirals of wire that surround the outer two conductors. They would be installed every 25 feet to make the conductor more visible. Spiral bird diverters would be in spans over Twomile Creek, South Twomile Creek, Floras Creek, Elk River, Crystal Creek, and Sixes River. The visual impacts on motorists, residents and recreational area users from the installation of spiral diverters are discussed below.

Visual impacts from operation and maintenance activities would be temporary and localized and would not result in any new or different impacts on visual resources. Temporary visual impacts from operations and maintenance activities would be low.

Motorists

Views of the transmission line from U.S. 101 are intermittent. In most areas where U.S. 101 is near the right-of-way, topography and trees screen the transmission line from view. Construction activities, such as structure replacement, access road improvements, and the resulting vegetation removal would potentially detract from the scenic nature of the U.S. 101 corridor in a few areas. Construction activities, however, would be temporary, and motorists along U.S. 101 typically travel at relatively high speed, which reduces their visual sensitivity. Temporary visual impacts related to construction would be low.

Permanent visual impacts on motorists traveling on U.S. 101 would include the following.

- Structure heights would increase by 5 to 25 feet near the Floras Creek crossing between Structures 14/3 and 15/2, and spiral bird diverters would be installed on conductor between Structures 14/4 and 14/5, within the floodplain.

- Structure heights would increase by 20 feet at the Sixes River crossing between Structures 21/6 and 22/1, and spiral bird diverters would be installed on conductor within this span.
- Structure heights would increase by 20 feet at Structure 31/5, which is briefly visible to motorists traveling southbound on U.S. 101 through Humbug Mountain State Park.
- Structure heights would increase by 5 to10 feet near Mussel Creek crossing between Structures 36/6 and 37/1.
- Structure heights would increase by up to 20 feet at the Euchre Creek crossing between Structures 40/4 and 40/5.

While these height increases would permanently increase the visibility of the transmission line from U.S. 101, the distance between the right-of-way and the highway, combined with the relatively small increase in structure height and relatively high traffic speeds of motorists, would reduce the sensitivity of motorists to these impacts. The permanent visual impacts on motorists would be low.

Residents

Residential viewers are highly sensitive to changes in their visual environment. Overall, few residences have direct views of the transmission line, but in these limited areas, the structures are visually prominent and near residences.

Residential viewers would have a direct view of construction activities. The residences along Pacific View Road (Line Mile 15) would be particularly affected because construction access would require the movement of construction vehicles and equipment along this private road, which serves as a residential access road. These residences would be exposed to views of construction activities during construction work associated with Structures 15/2 through 16/1. Because Structures 15/4, 15/6, 15/8, and 16/1 are within 300 feet of residences, construction work would be visible to the residents.

Because impacts from construction would be temporary, impacts on residents would generally be low. Residents with a view of work areas would experience moderate impacts during construction.

Transmission line structures would be more visible from some residences due to increased structure height, and conductor could be more visible to some residents in several areas due to the use of spiral bird diverters. These permanent impacts would be low to moderate depending on the view of residents and the proximity of homes to the transmission line.

The greatest potential for visual impacts on residents would occur in the following locations:

- Between Structures 9/7 and 10/1, a single residence is located approximately 650 feet north of the transmission line. Structure 9/7 would increase in height by 5 feet, and Structure 10/1 would increase by 20 feet. A new structure would be added between Structures 9/7 and 10/1. Because a clump of tall Douglas-fir trees is between the residence and the transmission line corridor, views of the transmission line structures from this residence would be partially obstructed. This impact would be low.
- Between Structures 15/2 and 16/1 along Pacific View Road, Structure 15/4 is located directly across the road from a residential driveway and is approximately 100 feet from the house. Structure 15/6 is located directly opposite a residential driveway and is within 200 feet of the

residence. Structures 15/8 and 16/1 are each approximately 200 to 300 feet from a residence in highly visible locations. Structure heights in this area would increase by 5 to 30 feet, making those visible structures more visually prominent and increasing impacts on adjacent residences. This impact would be moderate.

Recreation

Visitors to Humbug Mountain State Park would have views of construction activities. The construction work period within the State Park is expected to be very brief because only three structures and a short stretch of access road would require work. Views of the construction activities would be partially screened by the trees and topography and would only be visible in the distance and from a limited number of locations within the State Park. Therefore, temporary visual impacts at the State Park are anticipated to be low.

Users of the Cedar Bend and Bandon Crossings golf courses would be temporarily affected by construction activities. Activities associated with construction would detract from the natural visual environment of the area. While a quiet environment free of distractions is important to the ambience of a golf course, the disruptions would be temporary and seen from a distance. Visual impacts at these golf courses would be low.

The Proposed Action would permanently increase the visibility of the transmission line to recreational users in the following locations:

- Structures 31/3, 31/4, and 31/5, within the State Park, would increase in height, making them more visible to patrons of the day-use area. Structures 31/3 and 31/4 would increase in height by 5 feet, resulting in very little change to views. Structure 31/5 would increase in height by 20 feet, which could raise it above the surrounding vegetation and increase its local visibility. Permanent visual impacts on users of the State Park are anticipated to be moderate.
- Structures 41/2 through 42/2, located within between 100 and 200 feet of the Cedar Bend Golf Course, would increase in height by between 10 and 30 feet. Currently, views of these structures are mostly obscured by vegetation, but increased heights could increase their visibility from the golf course property. Permanent visual impacts on Cedar Bend Golf Course patrons are anticipated to be moderate. Structures 5/5, 5/6, and 5/7, visible to users of the Bandon Crossings Golf Course, would increase in height by between 10 and 15 feet. These height increases would make the structures more visible, although the change in height is minimal and would be less noticeable at greater distances from the transmission line. The installation of spiral bird diverters on conductor spanning South Twomile Creek would permanently increase the visibility of the transmission line from one golf course. Permanent visual impacts on users of the Bandon Crossings Golf Course are anticipated to be low to moderate.

3.3.3. Mitigation—Proposed Action

If the Proposed Action is implemented, BPA would implement the following mitigation measures to avoid or minimize impacts on visual resources.

- ~~Employ~~ Require a contractor to employ a lands liaison, who will be available to provide information, answer questions, and address concerns during project construction.

- Schedule all construction work during daylight hours to avoid noise and the use of nighttime illumination of work areas.
- Develop and distribute a schedule of construction activities to potentially affected landowners along the transmission line corridor to inform residents when they may be affected by construction activities; advertise construction schedule in local newspapers and post in public places customarily used for public notices, such as libraries, post offices, and local government buildings.
- Provide a schedule of construction activities to the owners/managers of potentially affected recreational facilities to allow the owners to advise visitors and appropriately schedule any events that could be adversely affected by construction activities.
- Keep construction activities and equipment clear of residential driveways, to the greatest extent possible.
- Use water trucks or other appropriate methods to control dust during construction, as needed.
- Reseed disturbed areas after construction and regrading are complete at the appropriate time period for germination with a native seed mix, a seed mix approved by the ODFW, or a seed mix identified in the *Stormwater Management Manual for Western Washington* (Washington State Department of Ecology 2005), or as agreed upon with landowners for use on their property.

3.3.4. Unavoidable Impacts Remaining After Mitigation—Proposed Action

If the Proposed Action is implemented, residents, recreational users, and motorists would be exposed to views of construction activities. Although these views would be temporary, visual impacts associated with construction would be unavoidable. These impacts would be low to moderate. In addition, some permanent visual changes to the transmission line could make it a more visible element in the landscape. These impacts would be low to moderate depending on the location of the changes in relation to the location of sensitive viewers.

3.3.5. Cumulative Impacts—Proposed Action

Visual resources in the project vicinity have incrementally changed due to past and present development, and this trend is expected to continue, although current views are not expected to change much in the near future. Cumulatively, this development has increased the presence of human-made elements, such as buildings, roads, utilities, and agriculture, into the visual landscape, although much of the area maintains elements of its original visual quality. Other BPA projects proposed for 2010 and 2011 along this corridor (access road work and groundwire replacement) would expose residents, motorists, and recreation users in these locations to the sight of construction equipment twice within a period of less than 2 years.

Most visual impacts from the Rebuild Project would be temporary and localized, except for some permanent, but minor changes to views from increased structure height, the addition of 19 structures, and the increased size of the proposed conductor. Because of the extremely limited nature of these visual changes, the contribution of the Proposed Action to cumulative impacts on visual resources would be low.

3.3.6. Environmental Consequences—No Action Alternative

Under the No Action Alternative, the existing transmission line would not be rebuilt, and, therefore, the permanent impacts related to the construction of the Rebuild Project would not occur. Operation and maintenance activities would continue, as described in Section 2.1.3. Maintenance activities would likely increase as existing structures deteriorate, and more structure repair and replacement could be required. Maintenance of access roads would be needed and access road work proposed under the Rebuild Project would likely need to take place as an operations and maintenance activity. Vegetation management could result in temporary changes to views. Operation and maintenance activities would result in low to moderate temporary impacts on visual resources, depending on the location of the disturbance, similar to the impacts described above.

This page left intentionally blank.

3.4. GEOLOGY AND SOILS

3.4.1. Affected Environment

The study area for geology and soils includes the existing right-of-way, danger tree removal area adjacent to the right-of-way, and the surrounding access road system that extends outside of the right-of-way, where road work would occur. Southern Coos County and all of Curry County lie within the Klamath Mountain geologic province (Dott 1971). The mountainsides are steep and fairly uniform and have broad, rounded ridgetops.

The study area is drained by many small tributaries of larger streams and rivers. The gradient of the small tributaries is fairly steep in the upper reaches of each ***watershed***, decreasing gradually to sea level. Soils within the project area that are eroded may reach streams and cause natural sediment levels to increase.

Landslides are common on the steeper hillsides in this area. In general, an area is prone to landslides if the terrain is steep, the rainfall is abundant, and the surface soil is underlain by shallow confining layers that trap water and thereby reduce cohesion between soil layers. Figure 3.4-1 shows the mapped locations with a high potential for landslides.

Geologic features at representative segments of the transmission line corridor are described below (Cook pers. comm.).

- **Line Miles 1–9.** This segment crosses human-made cranberry bogs with relatively flat marine terrace deposits of sand, silt clay, and gravel mantled by stable dune sand. Within the floodplains of major streams, deposits of sand, silt, clay, and mud occur. Geologic hazards include the loose, water-saturated soils in the floodplains and potential stream erosion.
- **Line Miles 9–16.** The transmission line corridor enters the foothills of the Coast Range, crossing moderately sloping to steep terrain with clay soils overlying bedrock. Active slides are common throughout this segment.
- **Line Miles 17–~~59~~46.** The transmission line corridor crosses sedimentary and limestone bedrock. The terrain varies from moderately steep to steep, and landslips are common in the steeper areas. Soft floodplain soil is located along the Elk River. ~~Isolated bedrock outcrops occur in Line Mile 54 and Line Miles 57 through 59.~~
- ~~**Line Miles 59–66. Th**e transmission line corridor crosses moderately sloping to steep terrain with clay soils overlying bedrock. The southern portion of the transmission line traverses regions of known unstable soil with recognized landslide potential.~~

3.4.2. Environmental Consequences—Proposed Action

The Proposed Action could result in direct and indirect impacts on soils from structure removal and installation, conducting road work, danger tree removal, and ongoing operation and maintenance activities. Direct impacts could occur as a result of direct soil disturbance, leading to loss of soils or soil compaction. Indirect impacts could occur as a result of vegetation removal that could lead to increased erosion over time.

Construction activities associated with rebuilding the transmission line and conducting road work would require clearing and grading, commonly with a bulldozer, which could strip or crush vegetation and move the upper, most biologically active portion of the soil either by direct disturbance or indirectly by increasing the potential for erosion. Loss of plant cover and movement of soil disrupts biological functions, including nutrient retention and recycling, and thus reduces productivity, at least temporarily.

Use of heavy equipment would result in increased soil compaction. Compaction of soils by heavy equipment degrades soil structure by reducing the pore space within soils. Pore spaces contribute to retention of moisture and gas exchange, which are important for respiration and other metabolic functions of soil organisms. Compaction would be localized and minimal; it would not be substantial enough to significantly increase or permanently alter stormwater runoff. Peak construction activities would be conducted during the dry season as much as possible in order to construct during low streamflow, rainfall, and runoff in order to minimize soil compaction. Direct impacts from soil compaction would be localized and largely temporary. Direct impacts on soils would be low to moderate.

Indirect impacts from project construction could include minor ***sheet erosion*** and the creation of some small channels. If soils were left bare or were slow to revegetate, minor gullying and other erosion could occur. Eroded soils could enter nearby surface waters and degrade water quality. The risk of erosion would be highest on steep slopes and during heavy rainfall. With the implementation of ***best management practices***, and mitigation, including conducting peak construction work during the dry season, indirect impacts would be low to moderate.

Unstable landslide areas exist throughout the project area. Structure placement in highly active landslide areas can be problematic, because the structures could move with the landslide area. Earth movement that is not minor can compromise the integrity of the structure and change the alignment of the conductor, which could put an unacceptable structural load on the conductor. Two-pole or three-pole wood structures are relatively flexible and can withstand minor landslide movement with little distress (Cook pers. comm.).

The potential for a landslide to affect the integrity of a structure depends on the quality of soils, the amount of moisture in the soils, the amount of surface water flowing across the site, the steepness of slopes, and whether guy wires are present. To minimize impacts from landslides, BPA conducted a preliminary survey of the existing structures and access roads. The survey revealed that one structure (Structure 34/2) had moved 9 feet from its original location as a result of a minor landslide although the movement had caused no visible impacts on either the structure or its conductor (Cook 2010). Under the Proposed Action, this structure would be relocated outside the slide zone. The 19 new structures and new access roads would not be constructed in landslide areas. Therefore, impacts from landslide hazards would be low.

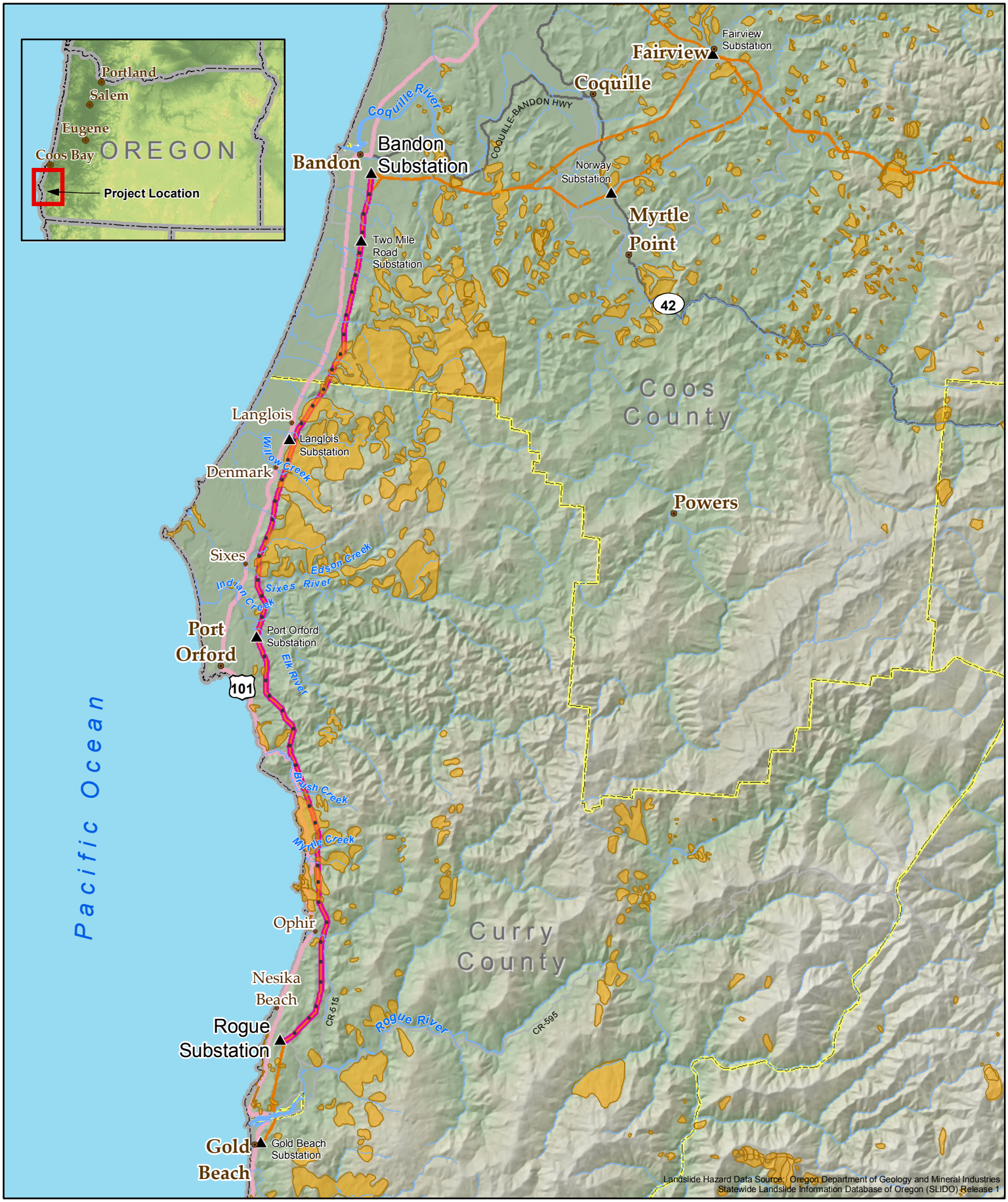

BPA Proposed Bandon-Rogue No. 1 Transmission Line Rebuild Project

Landslide Hazard Areas

N W E S

0 2.5 5 10 Miles

12/17/2010

BONNEVILLE POWER ADMINISTRATION

▲ BPA Substation

• First Structure of Each Mile

Project Line

BPA Transmission Lines

Major Rivers & Creeks

County Boundary

Landslide Hazard Areas

Figure 3.4-1

This page left intentionally blank.

3.4.3. Mitigation—Proposed Action

If the Proposed Action is implemented, BPA would implement the following mitigation measures to minimize impacts on soils.

- Conduct peak construction activities during the dry season (between June 1 and November 1), as much as possible, to minimize erosion, sedimentation, and soil compaction.
- Avoid siting new structures and access roads in active landslide zones during the design process.
- Locate staging areas in previously disturbed or graveled areas to minimize soil and vegetation disturbance, where practicable.
- Conduct standard inspections for work occurring within inactive landslide zones during construction.
- Contact BPA geotechnical specialists, if geotechnical issues, such as new landslides, arise during construction.
- Delineate construction limits within 200 feet of streams, other waterbodies, wetlands, and floodplains; manage sediment as specified in the Stormwater Pollution Prevention Plan (SWPP Plan), with an ~~a sediment fence, straw wattles, or a similarly~~ approved method that meets the *Stormwater Management Manual for Western Washington* (Washington State Department of Ecology 2005) erosion and stormwater control best management practices, to eliminate sediment discharge into waterways and wetlands, minimize the size of construction disturbance areas, and minimize removal of vegetation, to the greatest extent possible.
- Inspect erosion and sediment controls weekly, maintain them as needed to ensure their continued effectiveness, and remove them from the site when vegetation is re-established and the site has been stabilized.
- Design and construct access roads to minimize drainage from the road surface directly into surface waters, size new and replacement culverts large enough to accommodate predicted flows, and size and space cross drains and water bars properly to accommodate flows and direct sediment-laden waters into vegetated areas.
- Reseed disturbed areas after construction and regrading are complete, at the appropriate time period for germination, with a native seed mix, a seed mix recommended by ODFW, or a seed mix identified in the *Stormwater Management Manual for Western Washington* (Washington State Department of Ecology 2005), or as agreed upon with landowners for use on their property.
- Monitor seed germination of seeded areas with at least three field visits per year until site stabilization (defined as at least 70% cover by native or acceptable nonnative species) is achieved; if vegetative cover is inadequate, implement contingency measures and reseed to ensure adequate revegetation of disturbed soils.
- Inspect and maintain access roads, culverts, and other facilities after construction to ensure proper function and nominal erosion levels.

3.4.4. Unavoidable Impacts Remaining After Mitigation—Proposed Action

Although implementation of construction best management practices and mitigation would reduce the potential for increased erosion, some increased levels of temporary erosion would be expected during and immediately after construction. Long-term impacts remaining after

mitigation would be limited to normal sedimentation from road surfaces, soil compaction, some erosion of formerly vegetated ground, and loss or elimination of natural biological functions in the very few and isolated areas that were formerly undeveloped but would be converted to access roads. Impacts on soils would be low to moderate during and shortly after construction, then at a low level as disturbed areas revegetate. Impacts from landslide hazards would be low.

3.4.5. Cumulative Impacts—Proposed Action

The principal past, ongoing, and future activities that can be expected to cumulatively affect soils in the project vicinity are farming, grazing and timber production. Ongoing road maintenance projects conducted by BPA (i.e., Fairview-Rogue Access Roads Improvement Project) and other entities have the potential to contribute to these cumulative impacts. However, most of the is expected to continue to remain largely undeveloped. Because implementation of the mitigation measures described above would ensure that impacts of the Rebuild Project would be low to moderate, the contributions to cumulative soil impacts would be low to moderate.

3.4.6. Environmental Consequences—No Action Alternative

Under the No Action Alternative, the existing transmission line would not be rebuilt, and, therefore, the impacts related to the construction of the Rebuild Project would not occur. Operation and maintenance activities would continue and would be similar to existing conditions, as described in Section 2.1.3. Maintenance activities would likely increase as existing structures deteriorate, and more structure repair and replacement could be required. Maintenance of access roads would be needed and road work proposed under the Rebuild Project would likely need to take place as an operations and maintenance activity. The maintenance activities would result in low to moderate impacts on soils, including erosion and compaction, similar to the impacts described above.

3.5. VEGETATION

3.5.1. Affected Environment

The study area for vegetation includes the existing right-of-way, the danger tree removal area adjacent to the right-of-way, and the access road system that extends beyond the right-of-way where road work would occur.

Overview

Vegetation in the project vicinity has been extensively modified by a variety of land uses, including livestock grazing, cranberry farming, forestry, road and utility corridor construction and maintenance, and residential development. The introduction of nonnative plants such as gorse (*Ulex europaeus*), various broom species (*Cytisus* spp., *Genista monspessulana*), and pasture grasses has displaced many native plant species. Within some portions of the study area, the natural hydrology of the coastal shrubland and forest community have been altered by cranberry bog development, which covers approximately 2.1 miles of the right-of-way.

Plant Communities

The study area is located in the Sitka spruce (*Picea sitchensis*) forest vegetation zone, which has the mildest climate of any northwestern vegetation zone (Franklin and Dyrness 1988). This vegetation zone is a narrow strip of forest along the coast, only a few miles in width. The climate is uniformly wet and mild, and frequent fog and low clouds during the summer months minimize stress on plants from lack of moisture (Franklin and Dyrness 1988).

Plant communities in the study area include coastal shrubland and forest, upland pasture, mixed coniferous/evergreen broadleaf forest, ***riparian*** areas, and wetlands. The occurrence of these plant communities by line mile is presented in Table C-1 and Table C-2 (Appendix C) provides a list of common plant species that occur within the study area.

Coastal Shrubland and Forest

Coastal shrubland and forest are present in the northern 7 miles of the right-of-way and in the vicinity of Line Miles 22 and 23. Shore pine (*Pinus contorta*) is an indicator species of this plant community and Douglas-fir (*Pseudotsuga menziesii*) and madrone (*Arbutus menziesii*) are dominant tree species. The shrub layer consists of a diverse mix of native shrubs including salal (*Gaultheria shallon*), western rhododendron (*Rhododendron macrophyllum*), evergreen huckleberry (*Vaccinium ovatum*), and California wax myrtle (*Myrica californica*). Nonnative species in this community include gorse, Scot's broom, and pasture grasses such as sweet vernalgrass (*Anthoxanthum odoratum*), orchardgrass (*Dactylis glomerata*), and common velvet-grass (*Holcus lanatus*).

Upland Pasture

Upland pasture areas are common on moderate to steep slopes, such as between Line Miles 10 and 18 and near the Rogue Substation. Many upland pasture areas include some shrubs, such as gorse, and scattered patches of young to intermediate-aged Douglas-fir. The grasses in pastures

are generally nonnative, including sweet vernalgrass, orchardgrass, and common velvet-grass. Bracken fern (*Pteridium aquilinum*) and foxglove (*Digitalis* spp.) are common herbaceous species in pastures.

Mixed Coniferous/Evergreen Broadleaf Forest

Mixed coniferous/evergreen broadleaf forest is common on steep, dry slopes, particularly south of Line Mile 17, including Humbug Mountain State Park and the parcel of land managed by BLM. Common tree species include Douglas-fir, tanoak (*Lithocarpus densiflorus*), California laurel (*Umbellularia californica*), Port Orford cedar (*Cupressus lawsoniana*), western hemlock (*Tsuga heterophylla*), Sitka spruce, and madrone. Shrub cover can be very dense, consisting of salal, evergreen huckleberry, Pacific rhododendron (*Rhododendron macrophyllum*), coyotebrush (*Baccharis pilularis*), California wax myrtle, and cascara buckthorn (*Frangula purshiana*). Herbaceous species in this community include sword fern (*Polystichum californicum*), bracken fern, and Douglas iris (*Iris douglasiana*). Many forests in the project area are managed for timber production and have been recently cut, but some have stands of mature trees.

Riparian and Wetland Areas

Riparian and wetland areas are common throughout the study area. Typical riparian tree and shrub species include red alder (*Alnus rubra*), willows (*Salix* spp.), and vine maple (*Acer circinatum*), salmonberry (*Rubus spectabilis*), thimbleberry (*Rubus parviflorus*), and red elderberry (*Sambucus racemosa*). Common herbaceous species in wet areas include skunk cabbage (*Lysichiton americanus*), ladyfern (*Athyrium* spp.), water parsley (*Oenanthe sarmentosa*), bulrush (*Scirpus* spp.), and sedges (*Carex obnupta and C. lyngbyii*). See Section 3.7, Wetlands, of this EA for more information concerning wetlands in the study area.

Special-Status Plant Species

Special-status plant species have been identified for protection and/or management under federal or state laws or other mandates. Two special-status plant species listed under the federal Endangered Species Act (ESA) are known to occur in Coos and Curry counties: McDonald's rockcress (*Arabis macdonaldiana*) and western lily (*Lilium occidentale*). There is no designated critical habitat for these species within the study area.

The study area was field surveyed for these species in July 2009 and June and July 2010 (Arhangelsky 2009; Beck 2010). Potential habitat for McDonald's rockcress populations was not found within the study area.

Western lily occurs near the coast in bogs or coastal scrub in poorly drained soils (U.S. Fish and Wildlife Service 1998). In much of the study area with poorly drained soils, plant communities and wetland hydrology have been altered by agricultural activities and development. Two small populations of western lily were found within the right-of-way (Arhangelsky 2009; Beck 2010). Both populations are near unpaved access roads that are currently used for access to transmission line structures. Transmission line structures are located over 100 feet from the western lily populations. Each population consists of a few individual plants and associated plant species include some native species, and nonnative species, including gorse.

The BLM parcel in the study area was also surveyed for BLM special-status plant species. Surveys were performed in 2009 and 2010 (Turnstone Environmental Consultants 2009) and by

BLM in 2010 (U.S. Bureau of Land Management 2010b). BLM special-status species were not found in the parcel during either survey. The forest along the right-of-way within the BLM parcel consists of young Douglas-fir, tanoak, and California laurel in the overstory, and several nonnative plant species in the understory.

Humbug Mountain State Park was surveyed in June 2010 for special-status plant species, including federally listed plant species and state-listed plant species tracked by the Oregon Department of Agriculture (Beck 2010). Special-status species were not found in the State Park. The vegetation consists of coniferous trees such as Douglas-fir and western hemlock and broadleaved evergreen trees and shrubs including tanoak, California laurel, salal, western rhododendron, and Pacific poison oak (*Toxicodendron diversilobum*). The right-of-way has similar species composition to the adjacent forest, but without mature trees and with more nonnative grass coverage.

Giant purple wake-robin (*Trillium kurabayashii*) is a rare plant in Oregon. Although it is not federal- or state-listed, there are only five known Oregon populations. A population of this species that is known to occur in the study area was visited in 2010. Several clumps of giant purple wake-robin were confirmed to exist in a riparian area adjacent to the right-of-way.

Weeds

Noxious weeds are nonnative plants that have been designated as undesirable plants by federal and state laws. Weeds displace native species, decrease plant species diversity, degrade habitat for rare species and wildlife, decrease productivity of farms, rangelands and forests, create unattractive areas dominated by single species, and impair full use of the landscape by wildlife and humans. As weed infestations in the Oregon South Coast spread, private landowners and public land managers spend increasing amounts of money, time, and energy attempting to control weeds.

The Oregon Weed Board classifies noxious weeds in the following categories (Oregon Department of Agriculture 2010):

- "A" list designated weeds are weeds of known economic importance that occur in the state in small enough infestations to make eradication or containment possible. The recommended action for infestations is eradication or intensive control when and where found.
- "B" list designated weeds are weeds of economic importance that are regionally abundant but may have limited distribution in some counties. Recommended control actions are limited to intensive control at the state, county, or regional level as determined on a site-specific, case-by-case basis.
- Weeds on the "T" list are priority species for prevention and control by the Noxious Weed Control Program because they pose an economic threat to the state of Oregon.

To determine the extent of "A" and "B" list weed infestation along the Bandon-Rogue right-of-way, a noxious weed survey of the transmission line corridor was conducted in September 2010. Weed species occurrence was mapped. The total acreage each species occupies was estimated. The net acreage, which is an estimate of how much ground individuals of each weed species covers, was also estimated (Table C-3, Appendix C). Twelve weed species were found within the transmission line corridor; information on each species and its occurrence is provided below

and presented in Table C-3 (Appendix C). Project access roads were not surveyed for weeds in 2010; the access road weed survey is scheduled for spring 2011.

Spanish heath *(Erica lusitanica)* is the only "A" list species that was found within the right-of-way. Spanish heath was found in two locations in the right-of-way, in Line Miles 8 and 12, near the town of Langlois. It is likely that Spanish heath also occurs along access roads near these two locations. The density of this species is sparse and the coverage is low. In the right-of-way, it is estimated to currently cover less than 0.2 acre. Spanish heath currently has a limited distribution, but because it can spread rapidly, ODA is concerned it could become very problematic in the South Coast.

Gorse *(Ulex europaeus)* is the most common "B" list species in the project area; it has a supplemental "T" designation. This species is very problematic in the South Coast, because it expands rapidly into dense monocultures, forming spiny thickets that function as impenetrable barriers to the movement of wildlife, vehicles, livestock, and people. Because seeds deposited in soil remain viable for many years, long-term, repeated treatment is required. The Curry Weed Board has specifically targeted gorse and is focused on containment of the core coverage area, extending between Poverty Ridge to the north and the north side of Hubbard Creek to the south. Outside the core area, efforts to eradicate gorse using lethal treatment is recommended to prevent a gorse monoculture from developing. Gorse is found within approximately 172 acres of the right-of-way, with a net coverage of approximately 80 acres. In some areas gorse is scattered and in other areas forms monocultures that extend beyond the right-of-way, onto adjacent lands.

Himalayan or Armenian blackberry *(Rubus discolor)* is distributed throughout the study area, but is most common in the southern portion of the study area. This aggressive species grows into a monoculture that displaces other species. Because it invades riparian areas, it can degrade fish habitat. Himalayan blackberry is found within approximately 66 acres of the right-of-way, with a net coverage of approximately 7.2 acres.

Scotch and French broom (*Cytisus scoparius* and *Genista monspessulana*) are both found within the study area. Both species quickly invade disturbed areas, grow rapidly and decrease the productivity of land. Because they produce very persistent seeds, long-term control is required. Of the two species, scotch broom is the most widely scattered throughout the study area, occurring within approximately 104 acres of the right-of-way, with a net coverage of approximately 3.3 acres. French broom, a species similar in appearance to Scotch broom, is less common that Scotch broom. It is estimated to cover approximately 1.6 acres within the right-of-way, with a net coverage of approximately 0.6 acre.

Jubata grass and pampas grass *(Cortaderia jubata* and *Cortaderia selloana)* are found in four discrete locations within the right-of-way. These species escape from cultivation and crowd out native vegetation. In forests, jubata grass can out-compete seedling trees and retard their establishment and growth. Both species create a fire hazard with excessive build-up of dry leaves, leaf bases, and flowering stalks; and large clumps block vehicle access. These species cover less than 1 acre within the right-of-way, with a net coverage of approximately 0.04 acre.

Japanese knotweed *(Polygonum cuspidalum)* is found in one location in the right-of-way. A dense patch of Japanese knotweed covers approximately 4,000 feet along the south side of Hubbard Creek. Because of the invasive and persistent nature of Japanese knotweed, especially

in riparian habitats, it has a supplemental "T" designation. This species covers less than 1 acre within the right-of-way, with a net coverage of approximately 0.08 acre.

Bull and Canada thistle (*Circium vulgare* and *Circium arvense*) are two common thistles found distributed in open areas throughout the project area. Both species have a "T" designation. Thistles are weeds of waste places and farmland that readily colonize open, disturbed areas and are dispersed by many wind-blown seeds. Bull thistle covers 107 acres within the right-of-way, with a net coverage of approximately 0.6 acre. Canada thistle covers 42.1 acres within the right-of-way, with a net coverage of approximately 0.8 acre.

Italian thistle *(Carduus pycnocephalus)* was found in two areas within the right-of-way: within Line Mile 8 to Line Mile 15, and within Line Mile 44 to the Rogue Substation. Both of these areas are characterized by open pastures. Italian thistle infests roadsides, waste areas, and pastures. Once established, it spreads rapidly and forms dense stands, which displace more desirable vegetation and exclude livestock. Italian thistle covers approximately 68.6 acres within the right-of-way, with a net coverage of approximately 0.5 acre.

English ivy *(Hedera helix)* is found in one location within the right-of-way, in Line Mile 27, south of Hubbard Creek, within several hundred feet of China Mountain Road. This plant displaces native vegetation, slowly advancing across landscapes, and growing up onto shrubs and trees. Once established, it is difficult to eradicate. English ivy covers approximately 0.009 acre within the right-of-way, with a net coverage of approximately 0.002 acre.

Tansy ragwort *(Senecio jacobaea)* is distributed throughout the right-of-way. This species occurs along disturbed roadsides, in pastures, and in other open areas. Because tansy ragwort is toxic to horse and cattle, it is of particular concern in pastures. Tansy ragwort covers approximately 140.3 acres within the right-of-way, with a net coverage of approximately 1.0 acre.

Vegetation control routinely occurs along U.S. 101, county roads, residential roads, and utility corridors in the project vicinity. Because of the mild climate in the project vicinity, vegetation grows rapidly and requires frequent control near roads, transmission lines, and developed areas. Vegetation control activities generally include herbicide applications to control vegetation and noxious weeds, and mechanical cutting of vegetation.

Port-Orford-Cedar Root Disease

Port-Orford-cedar root disease is caused by a pathogen (*Phylophthora lateralis*) that infests the roots of Port Orford cedar, a common conifer in moist forests throughout the project vicinity (U.S. Forest Service and U.S. Bureau of Land Management 2003). Some of the dead conifers that BPA identified as danger trees are Port Orford cedar. Much of the project vicinity is known to be infested with the disease (McWilliams pers. comm.).

Spread of the pathogen occurs mainly through the movement of contaminated soil and water (U.S. Forest Service and U.S. Bureau of Land Management 2004). Human activity that moves soils infested with the pathogen, such as on machinery and vehicles, can result in the spread of Port--Orford-cedar root disease. Animals transport the pathogen on their hooves. The pathogen is present in some streams and it can spread through the movement of spores in surface waters.

Reducing the spread of the pathogen within an infested area helps contain infested areas. Additionally, a primary goal of managing this disease is to prevent it from spreading into and becoming established in disease-free watersheds (U.S. Forest Service and U.S. Bureau of Land Management 2004). New sources of contamination should be controlled by not moving soil or organic matter from areas with dead Port Orford cedar (potential areas with Port-Orford-cedar root disease) to areas with healthy Port Orford cedar (Betlejewski pers. comm.).

The Oregon Department of Forestry provided BPA with data on areas surveyed for infestation by Port-Orford-cedar root disease. These data were used to create maps to determine where infestation likely occurs within the study area (McWilliams pers. comm.). While dead Port Orford cedar are known to occur throughout the study area, there are a few areas where dead Port Orford cedar were not mapped by the Oregon Department of Forestry. These areas may not be infested or may not have as much infestation as other portions of the study area. These include work areas near Willow Creek and Boulder Creek (Line Miles 17 and 18), Rocky Creek and Beartrap Creek (Line Miles 30 and 31), Obrien Creek and Gillman Creek (Line Miles 37–40), and Edson Creek (Line Miles 43–45).

Vegetation Management

BPA conducts ongoing vegetation management under its Vegetation Management Program. Manual, mechanical, herbicidal, and biological methods of vegetation management are employed to keep plants from interfering with transmission lines and to foster low-growing plant communities (Bonneville Power Administration 2000a). These vegetation management activities prevent the development of forest within the right-of-way. As a result, much of the right-of-way consists of fields dominated by nonnative herbaceous species and low shrubs or shrublands that contain of a mix of native and nonnative species. These communities are more vulnerable to invasion by weed species than forest areas, because of the lack of more established trees to shade out weed species.

BPA also routinely takes action to remove “danger trees” along its transmission lines. As discussed in Chapter 2, Proposed Action and Alternatives, danger trees are trees located outside the right-of-way that are a current or future hazard to the transmission line. Numerous danger trees are present along the existing transmission line right-of-way. Most existing danger trees are scattered along the southern third of the transmission line, occurring singly or in small clumps. Danger tree species include Douglas-fir, various types of cedar, hemlock, California laurel, spruce, pine, and red alder.

3.5.2. Environmental Consequences—Proposed Action

Potential impacts on vegetation would occur from construction activities associated with rebuilding the transmission line, access road work, danger tree removal, and ongoing operation and maintenance activities. Direct impacts on vegetation would include the removal of or disturbance to vegetation. Indirect impacts could include the introduction and spread of noxious weed species and disturbance to plant communities from erosion and sedimentation.

Structure removal and installation would result in clearing and crushing of vegetation and damage to plant roots from compaction of soils by heavy equipment. The extent of direct impacts at any particular site would depend on the quality of existing vegetation, soils and topography. At most structure sites, an area of approximately 100 feet by 100 feet

(approximately 0.2 acre) could be disturbed. Up to approximately 62 acres of vegetation could be affected from the removal and installation of structures.

Direct impacts on vegetation would result from disturbance of shrubland and nonnative grasslands within the right-of-way and vegetation along access roads. Because most of these areas consist of lower quality habitat, impacts would be low and mostly of a temporary nature. In a few areas, creation of new roads and installation of new structures could disturb areas that have not been subject to much disturbance in the past. These areas are likely to consist of higher quality plant communities, with more native species. Although vegetation in these areas may be of higher quality, the level of the impact would be considered moderate, because of the small size of the area where vegetation would be disturbed or converted to road surface. Impacts on wetland plant communities are discussed in Section 3.7, Wetlands, of this EA.

A total of 587 danger trees have been identified for removal along the right-of-way as part of the Rebuild Project. Approximately half of these trees are Douglas-fir. The size of danger trees that would be removed, measured in diameter at breast height (dbh), varies from less than 8 inches to 40 inches dbh. Sixty-six of the identified danger trees are less than 8 inches dbh. Danger tree removal could open up forested areas to light, making these areas more vulnerable to invasion by weed species, many of which require light areas to grow. Native understory plants that tend to grow in the shade would not thrive temporarily in well lit forest openings. Because trees and shrubs would be expected to grow quickly in any forest openings created by danger tree removal, impacts would be low.

Special status plant species known to occur in the right-of-way would be present during the construction season, either in vegetative form, blooming, or fruiting and, therefore, vulnerable to disturbance. Giant purple wake-robin would not be affected by the Proposed Action, because the population is found in a low-lying riparian area that is spanned by the transmission line and Rebuild Project activities are not proposed in this area.

Rebuild Project activities with the potential to affect the two populations of western lily include access road work, including brushing of vegetation. There would be no impacts on the two western lily populations from structure construction and danger tree removal. Structure construction would not occur within 100 feet of either population and danger tree removal would not occur within 500 feet of either population.

One western lily population would not be impacted by access road work, because there would be an adequate vegetation buffer between the access road and the western lily plants. Because the other population is within 10 feet of an access road, western lily plants could be crushed by construction equipment and habitat could be degraded by nearby access road work. Existing hydrology within the western lily habitat would not be affected by access road work because it would not modify existing topography and drainage. Because these two populations are small and vulnerable to disturbance, impacts without mitigation would be moderate to high.

During and following construction, noxious weeds could spread and colonize disturbed areas. Construction equipment, vehicles, workers, and materials contaminated with seeds, roots, and other weed parts could spread weeds from one work area to another. Bare, disturbed, and compacted soils are vulnerable to weed invasion through natural dispersal, such as wind-blown seeds. Weeds could displace native plants and degrade vegetative communities, whether natural or managed. Because weeds are plentiful in the area and ground-disturbing activities would

open up new areas for weed infestation, impacts on vegetation from weed species could be moderate to high without appropriate mitigation.

Rebuild Project activities that move soils have the potential to spread Port-Orford-cedar root disease. Access road work, structure construction, and danger tree removal have the potential to move soils from work sites to other work areas through the movement of equipment and workers, who can transport soil. The U.S. Forest Service and U.S. Bureau of Land Management (2004) have identified best management practices that would minimize the spread of the pathogen. Best management practices that are relevant to Rebuild Project activities include the following measures.

- Clean equipment and vehicles before moving from a contaminated watershed to an uncontaminated watershed.
- Work during the dry season as much as possible.
- Designate access to and egress from work areas.
- Use wash stations to clean equipment prior to moving it into new areas.

BPA would follow these best management practices throughout the Rebuild Project, minimizing the spread of Port-Orford-cedar root disease during access road work and structure construction. Because danger tree removal is limited to individual trees or small clumps of trees, logging equipment would not be used and trees would be cut using a chain saw. Workers would walk into areas, cut trees, and not disturb roots, minimizing soil disturbance at the base of trees. BPA would install and maintain gates, further limiting access to the roads in the study area to unauthorized vehicles, which could transport soils on vehicles. Impacts on vegetation from the spread of Port-Orford-cedar disease would be low to moderate, because use of best management practices should help avoid or limit spread of the pathogen.

3.5.3. Mitigation—Proposed Action

If the Proposed Action is implemented, BPA would implement the following mitigation measures to avoid, minimize, or compensate for impacts on vegetation.

- Minimize disturbance to wetlands and wetland buffers by reducing ~~Reduce~~ structure construction work areas in or near wetlands to 50 feet by 50 feet per structure (approximately 0.06 acre), if possible, and install signage, fences, or flagging, where needed, to restrict vehicles and equipment to designated routes.
- Reseed disturbed areas after construction and regrading are complete, at the appropriate time period for germination, with a native seed mix, a seed mix recommended by ODFW, or a seed mix identified in the *Stormwater Management Manual for Western Washington* (Washington State Department of Ecology 2005), or as agreed upon with landowners for use on their property.
- Monitor seed germination of seeded areas with at least three field visits per year until site stabilization (defined as at least 70% cover by native or acceptable nonnative species) is achieved; if vegetative cover is inadequate, implement contingency measures and reseed to ensure adequate revegetation of disturbed soils.
- Explain western-lily-related mitigation measures to construction contractors and inspectors during a preconstruction meeting covering environmental requirements.

- Identify known western lily populations, including a 25-foot buffer, as sensitive areas in construction documents and maps used by construction contractors.
- Install protective fencing around identified western lily sensitive areas before construction activities begin in that area and place "sensitive area" signage on or near fencing around western lily population indicating where construction activities are prohibited.
- Relocate an existing access road to ensure it is at least 25 feet away from western lily plants.
- Remove encroaching woody vegetation species and noxious weeds in the two western lily sensitive areas using a variety of manual weed control methods and spread any vegetation removed within the vicinity of western lily sensitive areas, including wood chips, sawdust, branches, and woody debris, outside of the 25-foot buffer surrounding western lily plants.
- Survey the right-of-way for weed occurrence in fall 2010, mapping locations and estimating density of weed species.
- Survey Rebuild Project access roads for weed occurrence in spring 2011 and implement appropriate type and level of weed control for weed species that respond to spring or summer treatment during the survey or shortly thereafter.
- Develop a Weed Management Plan for Rebuild Project implementation that includes baseline information on known weed occurrences; specific actions that will be taken to minimize spread and control infestations including construction best management practices, control actions (chemical, cultural, biological, and physical methods) both preconstruction and post-construction, and actions that would be taken to monitor the spread of weeds into the project vicinity for at least 3 years after project implementation. The Weed Management Plan is presented in Appendix D.
- Control weeds prior to construction, with a focus on species with small contained infestations to reduce the potential for widespread establishment and the need for long-term management; weed species identified as occurring in discrete occurrences with the ability to radiate from this focal point include Spanish heath, English ivy, and pampas grass.
- ~~Provide contractors with preconstruction training on the identification of noxious weed species that occur in the project area and explain required actions to prevent their spread.~~
- Install vehicle and equipment wash stations ~~(water and compressed air) in each work area near where pavement ends and gravel or dirt access roads begin~~ to minimize spread of weeds and Port-Orford-cedar root disease, preferably near where pavement ends and gravel or dirt access roads begin, if feasible[1]; ~~mandate~~ use ~~of~~ wash stations ~~for~~ to clean vehicles and equipment prior to entering and leaving each work area; and prohibit discharge of vehicle wash water into any stream, waterbody, or wetland.
- Restrict construction activities to the area needed to work effectively, in order to limit disturbance of native plant communities to the minimum amount necessary to prevent spread of weed species.
- Use local sources of rock for road construction and obtain road fill materials from weed-free quarries.~~Obtain road fill materials from weed-free quarries.~~

[1] Finding suitable locations for wash stations in all work areas is not possible due to the presence of wetlands, waterways and steep topography. If wash stations could not be situated along each access road leading to work areas, equipment would be washed prior to entering work areas and as soon as possible after leaving work areas, at the nearest wash station location.

- Conduct weed control in riparian areas using procedures that prevent the introduction of toxic herbicides into aquatic areas, and use herbicides approved for use near aquatic areas.
- Conduct a post-construction weed survey, ~~2 years~~1 year after construction, of all areas disturbed by construction activities to determine if there are new weed infestations; implement appropriate control measures of weed infestations.

3.5.4. Unavoidable Impacts Remaining After Mitigation—Proposed Action

The Proposed Action would clear some small areas of mature plant communities, resulting in the loss of mature plants, habitat complexity, and species diversity in these areas. Replacement of structures and access road work could cause long-term soil compaction and reduced soil productivity around structures and on and along roadbeds, making it difficult for native species to thrive. Access road improvement and creation would further reduce vegetation cover, temporarily or permanently. Because of the prolific nature of noxious weeds in the study area, particularly gorse, and the difficulty of controlling them, their unintentional spread into some areas that are not currently infested could occur. Implementation of the weed control measures identified above would decrease the level of impact to moderate. Implementation of the mitigation measures to prevent harm to the two western lily populations would reduce impacts on a level of no impact to low impact. Weed management and brushing of woody vegetation in western lily habitat areas could have a beneficial effect. Impacts on vegetation from the spread of Port-Orford-cedar root disease would be low to moderate, because use of best management practices would help avoid or limit spread of the pathogen. Because existing structures would be replaced and new structures built entirely within the existing right-of-way, and because most access road improvements would occur within a previously disturbed corridor, unavoidable impacts to vegetation remaining after mitigation are expected to be low to moderate.

3.5.5. Cumulative Impacts—Proposed Action

Past, present, and future activities that have and will cumulatively affect vegetation include silvicultural activities, danger tree removal, vegetation control along roads and utility corridors, agricultural activities, livestock grazing, and residential development. If additional development occurs on privately owned lands in the project vicinity, a more extensive shift away from native vegetation communities could occur.

The Proposed Action would contribute, in a minor way, to the combined cumulative impacts of past, ongoing, and future vegetation-altering activities in the project vicinity. The amount of vegetation affected in the right-of-way and along project access roads is small compared to the area affected by silvicultural activities, agricultural activities, livestock grazing, and vegetation control along other linear utility and road corridors in the project vicinity. Although the overall area of impact is small, the right-of-way can act as a path for the movement and spread of weeds in this weed infested area. Because of the potential for spread of invasive species and the difficulty of controlling many weed species, this cumulative impact is considered moderate.

Approximately one-third of the historically known populations of western lily have disappeared and three-quarters of the existing populations consist of less than 100 individuals (U.S. Fish and Wildlife Service 1998). Western lily has been cumulatively affected by activities that adversely modify or destroy habitat, invasion of habitat areas by other plants that out-compete the western lily, grazing of lilies, and collection by humans for use in gardens (U.S. Fish and Wildlife

Service 1998). Through the implementation of mitigation measures, the two populations would not be affected or impacts would be low. The Proposed Action could contribute to cumulative adverse impacts on the western lily, although at a low level, given that high quality western lily habitat would not be affected.

3.5.6. Environmental Consequences—No Action Alternative

Under the No Action Alternative, the existing transmission line would not be rebuilt, and, therefore, the impacts related to construction of the Rebuild Project would not occur. Operation and maintenance activities would continue and be similar to existing conditions, as described in Section 2.1.3. Maintenance activities would likely increase as existing structures deteriorate and more structure repair and replacement could be required. Maintenance of access roads would be needed and road work proposed under the Rebuild Project would likely need to take place as an operations and maintenance activity. Maintenance activities would result in low to moderate impacts on vegetation, from localized vegetation disturbance and danger tree removal.

This page left intentionally blank.

3.6. WATERWAYS AND WATER QUALITY

3.6.1. Affected Environment

The study area for waterways and water quality consists of waterways intersected by the right-of-way, danger tree removal areas adjacent to and within the right-of-way, and the project access roads where work would occur. It also includes downstream areas that could be indirectly affected by the Proposed Action, generally 500 feet from work areas. Activities within 200 feet of streams were considered to have the potential to affect fish species and fish habitat. The introduction of sediments could affect downstream aquatic habitat up to 500 feet downstream from work areas. See Section 3.9, Fish, of this EA for a discussion of fish species and fish habitat present in the study area.

Surface Water

Within the study area, the right-of-way and access roads intersect 178 streams, including some tributary streams. Figures 3.6-1 through 3.6-4 show the right-of-way and the streams it intersects, as well as Federal Emergency Management Act 100-year Flood Hazard Zones.

The Oregon Department of Environmental Quality (ODEQ) identifies seven streams in the study area as water quality impaired in the 2004/2006 Integrated Report Database (Oregon Department of Environmental Quality 2010). Table 3.6-1 lists these streams and identifies which water quality parameters are impaired. These water quality parameters may be impaired for stream segments outside of the study area.

Table 3.6-1. Streams in the Study Area with Impaired Water Quality Parameters

Stream Name	Impaired Parameters
Johnson Creek	Temperature
Butte Creek	Temperature
Floras Creek	pH and Temperature
Willow Creek	Temperature
Indian Creek	Temperature
Elk River	Temperature
Euchre Creek	Temperature

Groundwater

Groundwater in the study area generally occurs in two types of aquifers: unconsolidated deposit aquifers and rock aquifers (Whitehead 1994). Unconsolidated deposit aquifers are found along existing and ancestral stream valleys, and provide substantial quantities of water to wells for public water supply, as well as domestic, commercial, agricultural, and industrial purposes. Along the coast, the deepest wells in unconsolidated deposit aquifers are approximately 110 feet below land surface. West of the Cascade Range, rock aquifers typically yield saltwater.

3.6.2. Environmental Consequences—Proposed Action

Surface Water

The Proposed Action has the potential to result in impacts on waterways and water quality within the study area. Ground disturbance more than 200 feet from streams is not expected to result in impacts on water quality, because the vegetated area between the disturbance area and the surface water would act as a vegetative filter intercepting sediments before being discharged into surface waters. The locations of construction work areas within 200 feet of streams and tributaries are presented in Appendix E.

Ground disturbance during construction could cause erosion and sedimentation that could reach streams and increase ***turbidity***. Erosion and sedimentation could occur from removing and installing structures, access road work, danger tree removal, and operations and maintenance activities. Work within stream channels, including culvert installation and replacement, would directly affect water quality by increasing turbidity. Indirect impacts on water quality could occur when sediment-laden runoff from construction work areas enters streams and results in increased turbidity. Temporary increases in turbidity would not exceed the terms and conditions of permits that would be obtained for the Rebuild Project. Because activities that could increase turbidity would be limited to specific locations, would be temporary, and would not exceed water quality parameters, the impacts on water quality would be low to moderate, depending on the amount of sediments that reached streams.

Waters could be contaminated from chemicals or other pollutants associated with construction activities and periodic operation and maintenance activities. Construction activities require the use fuel and other chemicals, such as coolants, hydraulic fluids, and brake fluids, to operate heavy equipment and vehicles. The potential risk of water quality impacts associated with accidental spills during construction would be low, because accidents that result in a spill of pollutants are rare and because prompt cleanup would be required by a Spill Prevention and Treatment Plan.

Access road work could affect hydrology and stormwater conveyance. Proper design of the road surface, including installation of cross drains, would direct the flow of surface water into vegetated areas where water would slowly infiltrate into soils. Culverts that would be replaced or installed would be designed to accommodate expected flows. Culverts that are replaced may improve hydrology in instances where the existing culvert is undersized. Because the Proposed Action would not adversely affect hydrology, impacts on hydrology would be low.

Vegetation removal near streams, including danger tree removal, could indirectly affect water quality by increasing exposure of surface waters to solar radiation, thereby increasing water temperatures. Six creeks within the study area are listed as impaired for temperature. The reduction in tree cover from the removal of a small number of danger trees along streams would be small relative to the amount of cover that exists along a particular stream corridor. The reduction of cover from roadside brushing near streams and riparian vegetation removal in culvert work areas would also be small relative to existing cover along a stream corridor. Indirect impacts on water quality from vegetation removal would be low to moderate depending on the extent of vegetation removed along each stream.

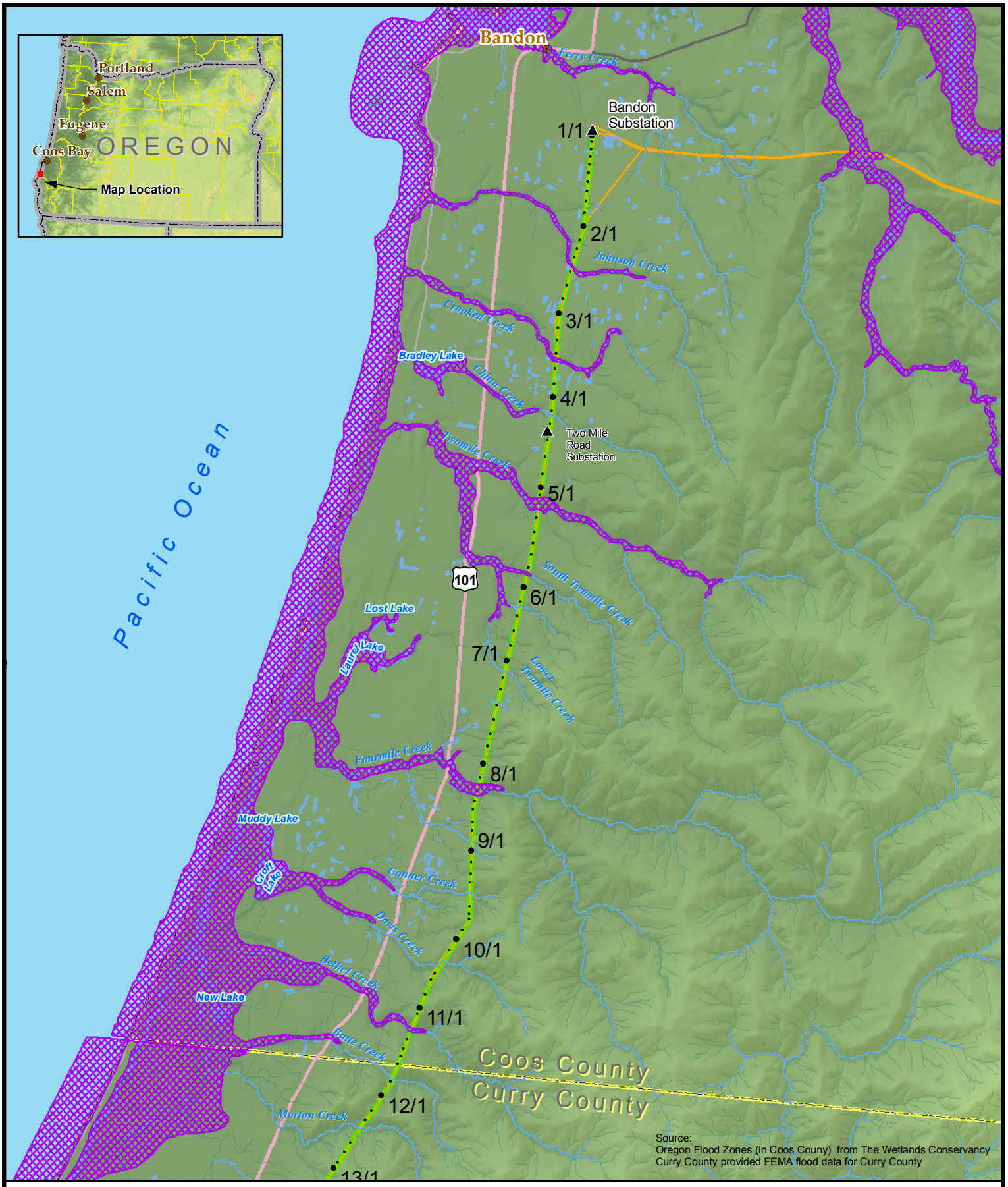

BPA Proposed Bandon-Rogue No. 1 Transmission Line Rebuild Project

Floodplains and Waterways with Existing Structure Locations

- BPA Substation
- Existing Structures
- First Structure of Each Mile
- Bandon-Rogue Transmission Line
- BPA Transmission Lines
- County Boundary
- Perennial Rivers & Streams
- Water Bodies
- FEMA Flood Hazard Zones

0 0.5 1 Mile

N W E S

10/27/2010

BONNEVILLE POWER ADMINISTRATION

Figure 3.6-1

This page left intentionally blank.

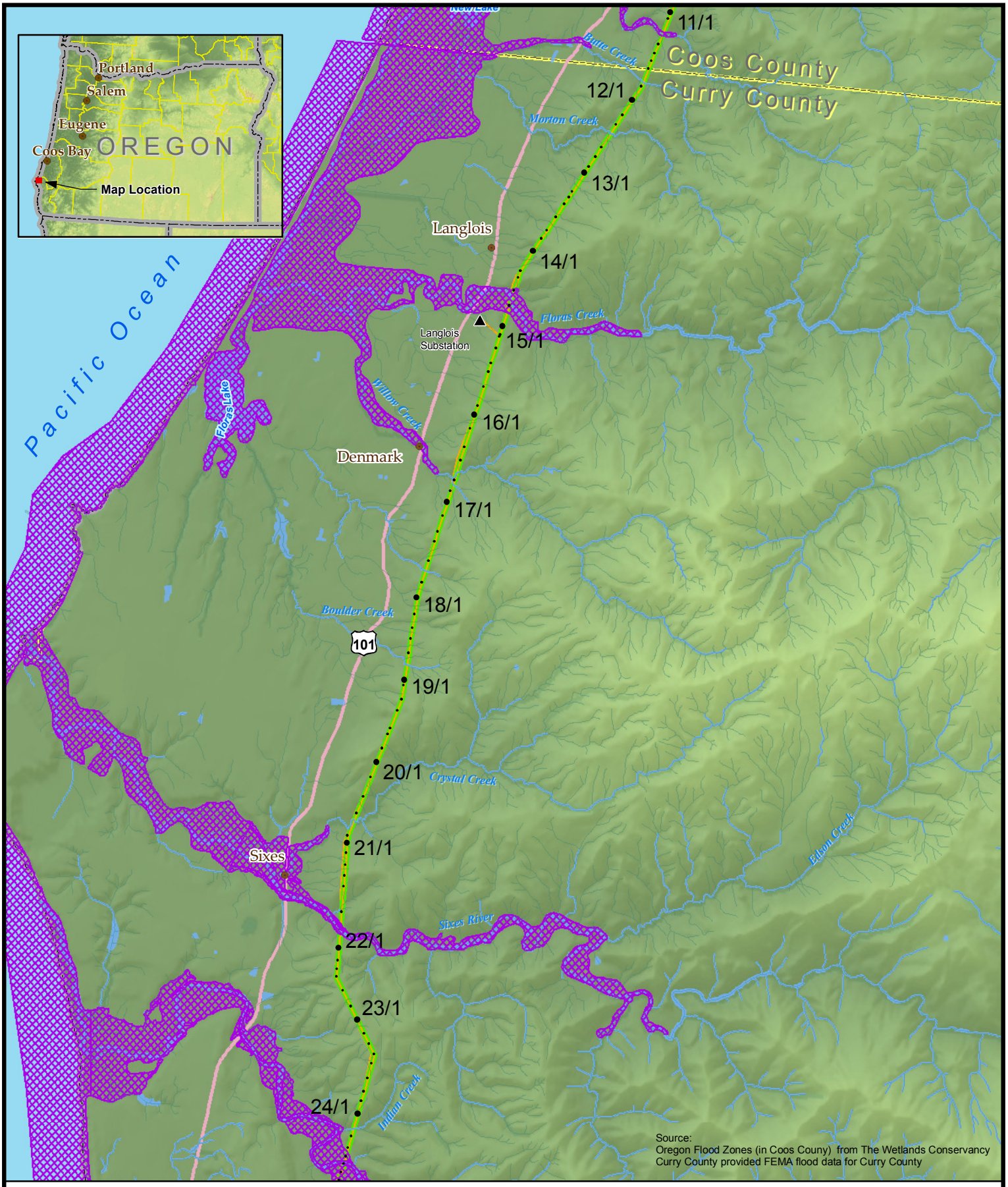

BPA Proposed Bandon-Rogue No. 1 Transmission Line Rebuild Project

Floodplains and Waterways with Existing Structure Locations

- BPA Substation
- Existing Structures
- First Structure of Each Mile
- Bandon-Rogue Transmission Line
- BPA Transmission Lines
- County Boundary
- Perennial Rivers & Streams
- Water Bodies
- FEMA Flood Hazard Zones

0 0.5 1 Mile

N W E S 10/27/2010

BONNEVILLE POWER ADMINISTRATION

Figure 3.6-2

This page left intentionally blank.

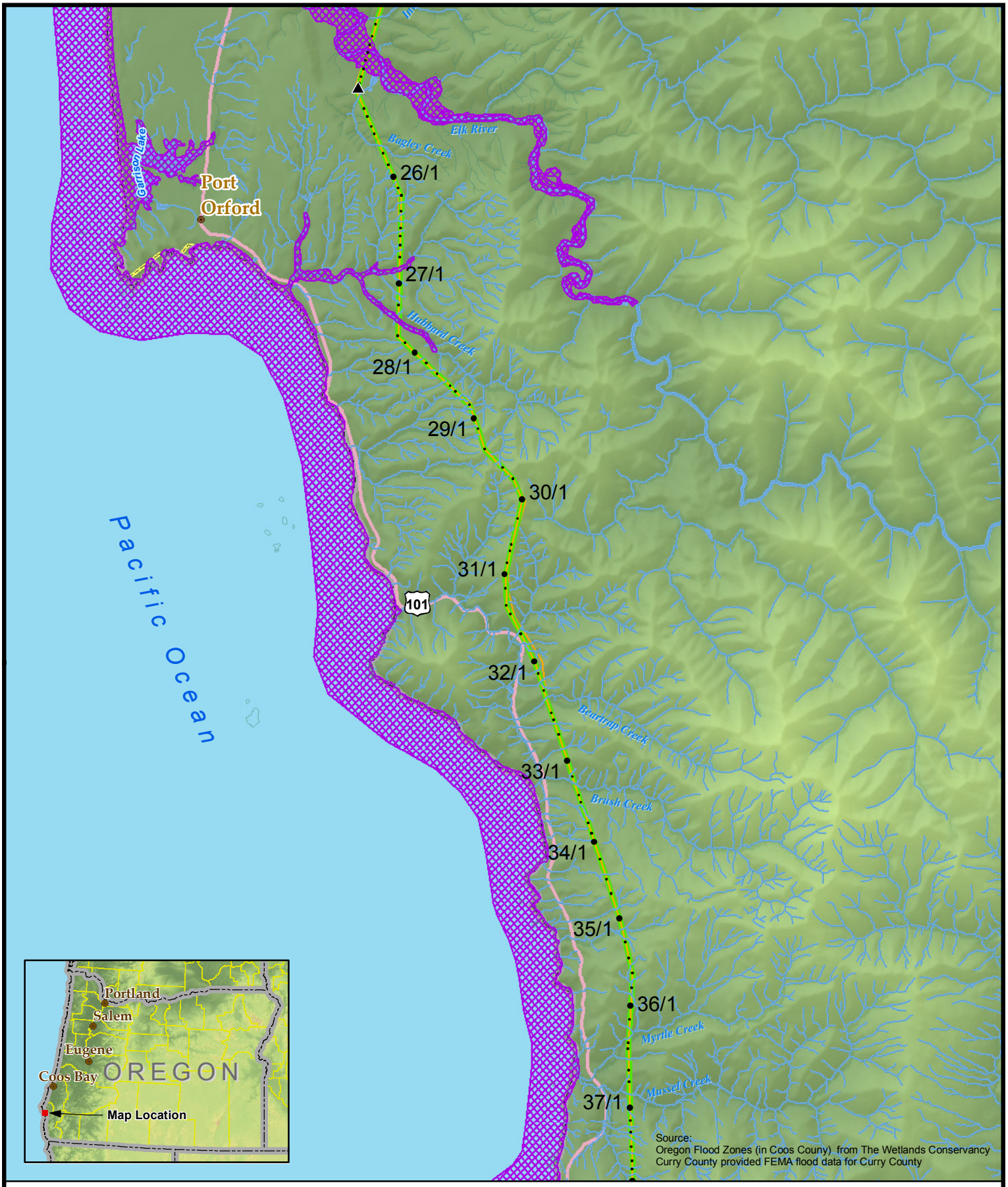

BPA Proposed Bandon-Rogue No. 1 Transmission Line Rebuild Project

Floodplains and Waterways with Existing Structure Locations

- BPA Substation
- Existing Structures
- First Structure of Each Mile
- Bandon-Rogue Transmission Line
- BPA Transmission Lines
- County Boundary
- Perennial Rivers & Streams
- Water Bodies
- FEMA Flood Hazard Zones

0 0.5 1 Mile

N W E S 10/27/2010

BONNEVILLE POWER ADMINISTRATION

Figure 3.6-3

This page left intentionally blank.

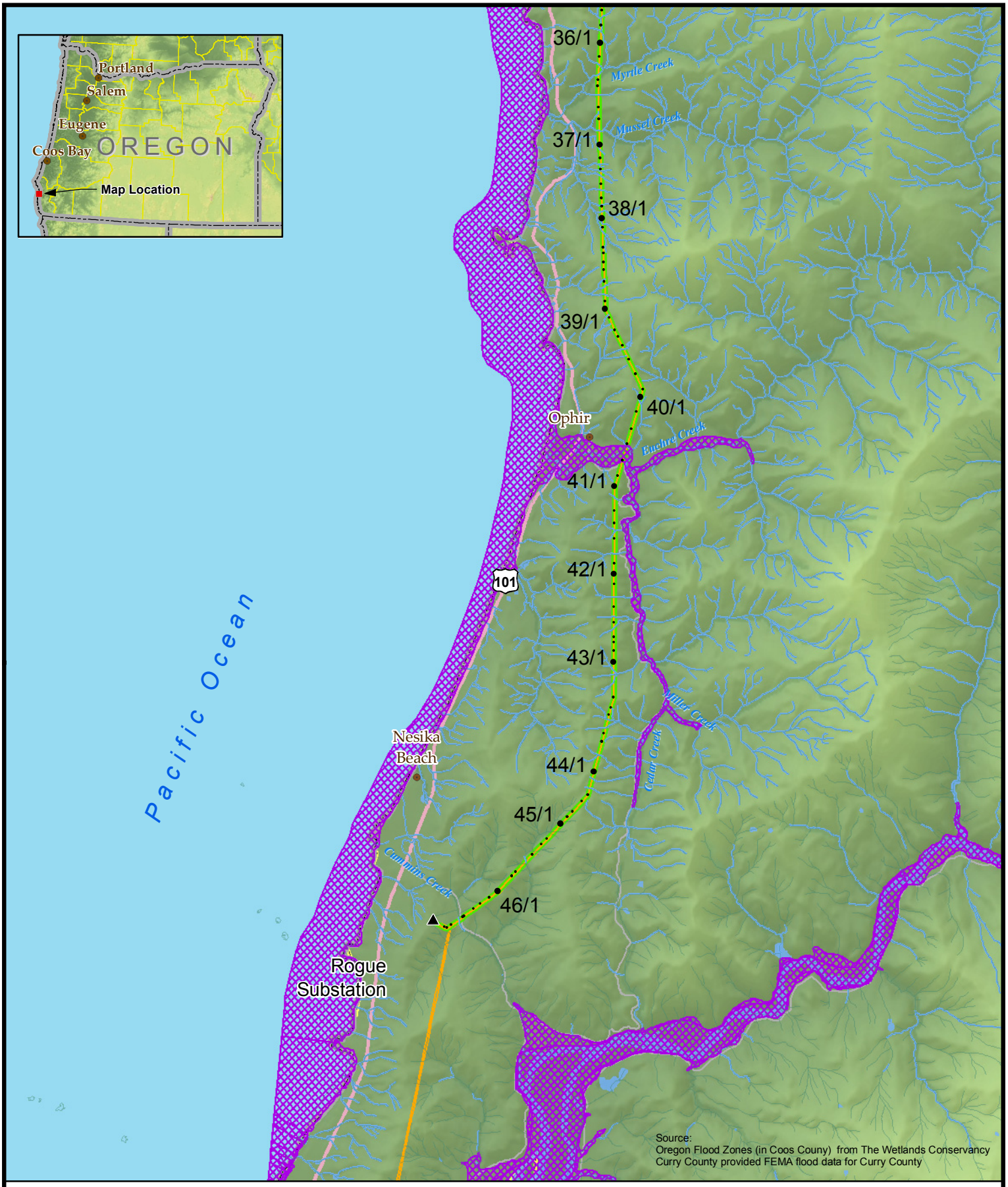

BPA Proposed Bandon-Rogue No. 1 Transmission Line Rebuild Project

Floodplains and Waterways with Existing Structure Locations

- BPA Substation
- Existing Structures
- First Structure of Each Mile
- Bandon-Rogue Transmission Line
- BPA Transmission Lines
- County Boundary
- Perennial Rivers & Streams
- Water Bodies
- FEMA Flood Hazard Zones

0 0.5 1 Mile

N W E S 10/27/2010

BONNEVILLE POWER ADMINISTRATION

Figure 3.6-4

This page left intentionally blank.

Groundwater

Ground disturbing activities associated with the Proposed Action are not expected to affect groundwater quality, because these activities would not result in deep excavations that would directly reach groundwater resources. Any sediments that would be transported subsurface would likely filter out of groundwater relatively quickly and would not have any measurable impact on groundwater aquifers or exceed applicable thresholds. The ratio of the potential area of groundwater impact to the area available for groundwater recharge is extremely small. Therefore, the impact on groundwater would be very low.

3.6.3. Mitigation—Proposed Action

If the Proposed Action is implemented, BPA would implement the following mitigation measures to avoid or minimize impacts on waterways and water quality.

- Design and construct access roads to minimize drainage from the road surface directly into surface waters, size new and replacement culverts large enough to accommodate predicted flows, and size and space cross drains and water bars properly to accommodate flows and direct sediment laden waters into vegetated areas.
- Review water quality mitigation measures, required best management practices, and permit requirements with construction contractors and inspectors during a preconstruction meeting covering environmental requirements.
- Conduct peak construction activities during the dry season (between June 1 and November 1), as much as possible, to minimize erosion, sedimentation, and soil compaction.
- Delineate construction limits within 200 feet of streams, other waterbodies, wetlands, and floodplains; manage sediment as specified in the SWPP Plan, with an ~~a sediment fence, straw wattles, or a similarly~~ approved method that meets the *Stormwater Management Manual for Western Washington* (Washington State Department of Ecology 2005) erosion and stormwater control best management practices, to eliminate sediment discharge into waterways and wetlands, minimize the size of construction disturbance areas, and minimize removal of vegetation, to the greatest extent possible.
- Inspect erosion and sediment controls weekly, maintain them as needed to ensure their continued effectiveness, and remove them from the site when vegetation is re-established and the site has been stabilized.
- Implement a Spill Prevention and Treatment Plan that requires storage of fuel and other potential pollutants in a secure location at least 150 feet away from streams, waterbodies, and wetlands; that ensures that spill containment and cleanup materials are readily available on site and restocked within 24 hours, if used, and that ensures that, in the event of a spill, contractors are trained to immediately contain the spill, eliminate the source, and deploy appropriate measures to clean and dispose of spilled materials in accordance with federal, state, and local regulation.
- Restrict refueling and servicing operations to locations where any spilled material cannot enter natural or human-made drainage conveyances (e.g., ditches, catch basins, ponds, wetlands, streams, and pipes), at least 150 feet from streams, waterbodies, and wetlands; use pumps, funnels, absorbent pads, and drip pans when fueling or servicing vehicles.
- Store, fuel, and maintain vehicles and equipment in designated vehicle staging areas located a minimum of 150 feet away from any stream, waterbodies, and wetlands.

- Power wash all vehicles and equipment at an approved cleaning facility prior to entering construction work areas to remove any residual sediment, petroleum, or other contaminants; inspect equipment and tanks on a weekly basis for drips or leaks and promptly make necessary repairs.
- Check all equipment used for instream work for leaks, and, prior to entering waterways, completely clean off any external petroleum products, hydraulic fluid, coolants, and other pollutants.
- ~~Prohibit discharge of vehicle wash water into any stream, waterbody, or wetland without pretreatment to meet state water quality standards.~~ [1]
- Locate tensioning sites at least 200 feet away from surface waters, including wetlands, and outside of 100-year floodplains, if possible.
- Prohibit sidecasting of road grading materials along roads within 300 feet of ***perennial*** streams.
- Reseed disturbed areas after construction and regrading are complete, at the appropriate time period for germination, with a native seed mix, a seed mix recommended by ODFW, or a seed mix identified in the *Stormwater Management Manual for Western Washington,* or as agreed upon with landowners for use on their property.
- Monitor seed germination of seeded areas with at least three field visits per year until site stabilization (defined as at least 70% cover by native or acceptable nonnative species) is achieved; if vegetative cover is inadequate, implement contingency measures and reseed to ensure adequate revegetation of disturbed soils.
- Inspect and maintain access roads, culverts, and other facilities after construction to ensure proper function and nominal erosion levels.
- Cut danger trees in the Johnson Creek floodplain without disturbing tree roots.

3.6.4. Unavoidable Impacts Remaining After Mitigation—Proposed Action

Although there is the potential for temporary and localized impacts on water quality during construction, these impacts would not be permanent or long-term, and would be localized. Implementation of the mitigation measures described above would reduce these impacts, but would not completely eliminate them. It is expected that implementation of mitigation would either return water quality to previous levels or that improvements to access road drainage would result in water quality improvements. The low to moderate impact of potential increased stream temperatures from removal of danger trees would not be mitigated.

3.6.5. Cumulative Impacts—Proposed Action

Several actions in the project vicinity are likely to have had a cumulatively adverse effect on water quality through increased erosion and overland transport of suspended sediments to surface waters. They include past, present, and future logging operations and agricultural activities; the BPA Fairview-Rogue Access Roads Improvement Project; local and state road and bridge construction and maintenance activities; and utility maintenance activities, including BPA's vegetation management activities.

---

[1] This measure has been deleted, because vehicle wash water would not be discharged into streams, waterbodies, or wetlands.

Compared with the extent of ground disturbance associated with these actions, the Proposed Action would contribute a minor amount to cumulative water quality impacts. Therefore, cumulative impacts on water quality would be low.

3.6.6. Environmental Consequences—No Action Alternative

Under the No Action Alternative, the existing transmission line would not be rebuilt, and, therefore, the impacts related to construction of the Rebuild Project would not occur. Operation and maintenance activities would continue and would be similar to existing conditions, as described in Section 2.1.3. Maintenance activities would likely increase as existing structures deteriorate and more structure repair and replacement could be required compared to existing conditions. Maintenance of access roads would be needed and road work proposed under the Rebuild Project would likely need to take place as an operations and maintenance activity. Maintenance activities would result in low to moderate impacts on water quality similar to the impacts described above.

This page left intentionally blank.

3.7. WETLANDS

3.7.1. Affected Environment

The study area for ***wetlands*** includes the area within 100 feet of each existing and proposed structure site and the access roads where work would be conducted. Wetlands are areas that have certain characteristics related to water, soils, and vegetation. To be considered a wetland, the following criteria must be met: 1) the area must be inundated or saturated with water for a portion of the growing season in most years; 2) the soils in the area must have certain characteristics matching soil types that are subject to prolonged saturation (hydric soils); and 3) the area must contain plant species with special adaptations that enable them to grow in saturated soils.

To determine the presence of wetlands in the study area, a preliminary review of existing information was conducted. Potential wetland areas in the study area were identified using National Wetland Inventory (NWI) maps. A variety of other maps and aerial photographs were also used to identify ponds, streams, depressions, and other areas that might be wetland areas. County soil survey maps were used to locate areas with hydric soils.

To verify the presence of wetlands in the study area, field surveys were conducted in the summer, fall, and winter of 2010 (Turnstone Environmental Consultants 2010). Based on these surveys, 131 wetland areas were identified in or near structure and access road construction work areas: 70 within the right-of-way and 61 along project access roads. Most wetlands within the right-of-way are vegetated with herbaceous species, but some wetlands within the right-of-way also contain shrub species. Wetlands dominated by tree species generally occur along access roads, but wetlands dominated by herbaceous and shrub species also occur along access roads. All of the identified wetlands in the study area are freshwater wetlands.

Several types of wetlands occur in the study area. Some are associated with waterways. Wetlands found along small streams in some riparian areas are generally vegetated with native species. Broader expanses of wetlands, found in some ***floodplains***, are commonly used as pastures. Wetland plant species in pastures are primarily nonnative pasture grasses. A variety of wetland types are found along access roads in the study area. Some of these wetlands were created when access road cuts exposed the water table, resulting in water accumulating along road edges. Seeps, areas where groundwater emerges on the surface, are found throughout the study area. Some hillside seeps drain to roadside ditches, which have developed wetland characteristics. Some culverts are too small or partially blocked, resulting in the ponding of water above the culvert, creating wetlands. Because some soils in the study area have a high clay content and are poorly drained, some wetlands were created through compaction and excavation of soils by heavy equipment.

Within the northern portion of the study area, wetlands are found in some low-lying areas. These wetlands are seasonal, with a high water table in the winter and spring and becoming dry by mid-summer. The flow of water (i.e., hydrology) has been altered in much of this portion of the study area by development. Some wetlands were filled for various reasons, including agricultural development.

Plant species within the study area wetlands vary, but in general the following categories of wetlands contain the following plant species:

- Wetlands dominated by herbaceous species (i.e., emergent wetlands) are vegetated mostly with grasses and rushes; common species include Pacific reedgrass (*Calamagrostis nutkaensis*), soft rush (Juncus effusus), spreading rush (*Juncus patens*), and nonnative grasses such as velvet-grass (*Holcus lanatus*).
- Shrub-dominated wetlands have a variety of willow species (*Salix* spp.), salmonberry (Rubus spectabilis), and black twinberry (*Lonicera involucrata*); herbaceous species that commonly grow under the shrubs include skunk cabbage (*Lysichiton americanus*), fringecup (*Tellima grandiflora*), ladyfern (*Athyrium filix-femina*), and deer fern (*Blechnum spicant*).
- Forested wetlands generally are shaded by red alder (*Alnus rubra*) and cascara (*Rhamnus purshiana*) and include many of the species characteristic of shrub-dominated wetlands in the shady understory.

Wetlands in the study area perform valuable functions. They provide nutrients and habitat that support a diversity of fish, animals, and plants, including rare species such as the western lily and juvenile coho salmon. Wetlands function to hold stormwater during high precipitation events. They retain and filter pollutants and sediments, improving water quality. Some wetlands are considered attractive areas that provide diversity in the visual landscape.

3.7.2. Environmental Consequences—Proposed Action

Direct impacts on wetlands would result from the disturbance of wetlands by construction equipment and the placement of temporary or permanent fill within wetlands in construction work areas. Work within wetlands would result in trampling, breaking, and crushing wetland vegetation. Wetland soils would be compacted by construction machinery, potentially affecting hydrology and vegetation. Because wetlands that are permanently filled would no longer function as wetlands, this would reduce the acreage of wetlands in the study area.

Direct impacts would occur as a result of work on structures within wetlands. ~~Seven~~ Six existing structures would be removed that are currently within wetlands and these structures would be replaced in the same location (Appendix F). To minimize impacts on wetlands, the disturbance area for work associated with structures would be reduced to approximately 50 feet by 50 feet per structure (approximately 0.06 acre), or the minimum area needed to perform structure removal and installation. Signage, fences, and flagging would be installed to restrict work areas and confine vehicles and equipment to designated routes outside of wetlands, where possible. The amount of permanent fill in wetlands associated with structure removal and installation would be less than 5 cubic yards~~approximately 0.2 acre~~. BPA is coordinating with the U.S. Army Corps of Engineers and Oregon Department of State Lands to avoid and minimize impacts on wetlands and obtain any necessary permits for impacts on wetlands. Because the area filled would be small, impacts on wetlands associated with permanent fill from structure work would be low.

Direct impacts on wetlands would occur as a result of access road work, including work along the road shoulder and culvert work. During access road reconstruction, a narrow strip of wetlands adjacent to the existing access road could be filled in areas where wetlands occur on one or both sides of the access road. ~~In areas where wetlands occur along only one side of the~~

~~access road, w~~Wetland impacts would be avoided during access road work, where possible. Some culvert installations would result in disturbance of wetland soils and vegetation and the placement of a small amount of fill in wetlands along streams and within stream channels. The amount of permanent fill in wetlands associated with access road work would be approximately 0.12~~3~~ acre. Because the wetland area permanently filled would be small, impacts on wetlands associated with permanent fill from access road work would be low.

Construction activity associated with structure removal and installation ~~and access road work~~ would result in temporary wetland disturbance, including the disturbance of wetland vegetation and compaction of soils affecting approximately 0.28 acre. In areas of temporary disturbance, some wetland functions would be lost or impaired during and after construction until the area was revegetated. ~~Some temporary fill might be needed for temporary access roads through wetlands in pastures. They~~ Temporary fill would be constructed so that ~~fill~~ it could be removed, such as through placement of geotextile fabric under rock or use of wetland mats. It is expected that temporary fill for construction ~~would affect less than 1 acre of wetland, and it~~ would not permanently alter wetland hydrology. Wetland vegetation would eventually regrow. Because the impacts would be temporary (with the exception of minor soil compaction) and vegetation would reestablish, indirect impacts on wetlands would be low.

The Proposed Action could indirectly affect wetlands by damaging ***wetland buffers***. Vegetated buffers perform important functions for wetlands, functioning as filters that remove sediment and other potential contaminants from entering wetlands. ~~Fourteen~~ Sixteen structures would be removed and 20~~15~~ structures would be installed within 100 feet of, but not within, wetlands (Appendix F). Use of tensioning sites and construction associated with road work near wetlands also has the potential to affect wetland buffers. Wetland buffer vegetation would be crushed and soils would be compacted. Impacts on buffers would be minimized at each of the structure work sites within 100 feet of wetlands, by enclosing as much of the wetland and buffer area as possible within silt fence to restrict the area where work would be performed. This will minimize the removal of wetland buffer vegetation and decrease the potential for construction-related runoff and erosion entering wetlands. This, in turn, would minimize the spread of invasive species into the wetland. Because disturbance to wetland buffers from construction activities would be minimized and temporary (with the exception of minor soil compaction), this impact would be low.

Operation and maintenance activities would periodically affect wetlands. Vegetation management activities would include occasional trimming or removal of tall-growing vegetation from wetlands and wetland buffers. Road maintenance activities would occur near or within wetlands, including culvert replacement. Maintenance of structures in or directly adjacent to wetlands would rarely be needed, but when needed, would result in disturbance of wetland and wetland buffer vegetation and soils. Due to the localized impact on wetlands that would generally be temporary, operation and maintenance would have a low to moderate impact on wetlands, depending on the type of work, quality of wetland, and extent of impacts.

3.7.3. Mitigation—Proposed Action

If the Proposed Action is implemented, BPA would implement the following mitigation measures to avoid, minimize, and compensate for impacts on wetlands. In addition, weed

control and revegetation measures in Section 3.5, Vegetation, of this EA would also mitigate for impacts on wetlands.

- Avoid siting new structures and access roads within 200 feet of streams and wetlands during the design process, where possible.
- Explain wetland-related permit conditions and mitigation measures to construction contractors and inspectors during a preconstruction meeting covering environmental requirements.
- Conduct peak construction activities during the dry season (between June 1 and November 1) as much as possible in order to minimize erosion, sedimentation, and soil compaction.
- Conduct construction work within wetlands in accordance with applicable permits.
- Minimize disturbance to wetlands and wetland buffers by reducing structure construction work areas in or near wetlands ~~the disturbance area for work associated with structures~~ to approximately 50 feet by 50 feet per structure (approximately 0.06 acre), ~~where~~ if possible, and install signage, fences, and flagging, where needed, to restrict vehicles and equipment to designated routes ~~outside of wetlands~~.
- Delineate construction limits within 200 feet of streams, other waterbodies, wetlands, and floodplains; manage sediment as specified in the SWPP ~~as specified in the Stormwater Pollution Prevention~~ Plan, with an ~~a sediment fence, straw wattles, or a similarly~~ approved method that meets the *Stormwater Management Manual for Western Washington* (Washington State Department of Ecology 2005) erosion and stormwater control best management practices,~~,~~ to eliminate sediment discharge into waterways and wetlands, minimize the size of construction disturbance areas, and minimize removal of vegetation, to the greatest extent possible.
- Avoid deposit of excavated material into wetlands during structure construction, or remove all excavated material from the wetland, except as allowed by permit, and stabilize the removed fill in an upland area.
- ~~Ensure that all vehicles and heavy equipment are stored, fueled and maintained~~Store, fuel, and maintain vehicles and equipment ~~pre- and post-construction~~ in designated vehicle staging areas located a minimum of 150 feet away from streams, waterbodies, and wetlands.
- Locate tensioning sites at least 200 feet away from surface waters, including wetlands, and outside of 100-year floodplains, if possible.
- Revegetate disturbed areas in wetlands and wetland buffers following specific revegetation guidelines in permits, use native species for revegetation in wetlands that are not in agricultural areas, and reseed pastures with an appropriate seed mix.
- Implement a Spill Prevention and Treatment Plan that requires storage of fuel and other potential pollutants in a secure location at least 150 feet from streams, waterbodies, and wetlands; that ensures that spill containment and cleanup materials are readily available on site and restocked within 24 hours, if used; and that ensures that, in the event of a spill, contractors are trained to immediately contain the spill, eliminate the source, and deploy appropriate measures to clean and dispose of spilled materials in accordance with federal, state, and local regulation.
- Restrict refueling and servicing operations to locations where any spilled material cannot enter natural or human-made drainage conveyances (e.g., ditches, catch basins, ponds, wetlands, streams, and pipes), at least 150 feet from streams, waterbodies, and wetlands; use pumps, funnels, absorbent pads, and drip pans when fueling or servicing vehicles.

3.7.4. Unavoidable Impacts Remaining After Mitigation—Proposed Action

The Proposed Action ~~would~~ is expected to result in ~~less than 0.5~~ 0.12 acre of permanent fill in wetlands from structure removal and installation, culvert installation, and road reconstruction. It ~~would also~~ is expected to result in ~~less than 1.0~~ 0.28 acre of temporary fill and disturbance to wetlands from the construction of temporary access roads and the installation of structures. In areas of temporary disturbance, some wetland functions would be lost or impaired during and after construction until the area was revegetated. Even with the implementation of the mitigation described above, these impacts would remain. Unavoidable impacts on wetlands would be low to moderate with implementation of identified mitigation.

3.7.5. Cumulative Impacts—Proposed Action

Past, present, and future actions in the project vicinity have cumulatively affected wetlands through destruction and degradation of wetlands and conversion of forested wetlands to non-forested wetlands. These actions include forestry, farming, ranching, and utility and road construction and maintenance, including the BPA Fairview-Rogue Access Roads Improvement Project (which resulted in minimal wetland impacts).

Statewide, approximately 38% of wetlands are estimated to have been converted to other uses (Oregon Department of State Lands 2004). It is not known what proportion of freshwater wetlands in the project vicinity has been altered or filled by various activities. Some NWI wetlands on or near the right-of-way no longer exist due to agricultural activities. Some activities, including utility line construction and maintenance, have converted forested or shrub-dominated wetlands to open areas dominated by herbaceous species. Wetland hydrology has been altered from its natural condition in many areas, affecting wetlands.

Because the impacts of the Rebuild Project ~~would fill less than 0.5~~ are expected to result in 0.4 acre of temporary and permanent fill in freshwater wetlands, the Proposed Action would contribute in an extremely minor way to cumulative impacts on wetlands within the project vicinity.

3.7.6. Environmental Consequences—No Action Alternative

Under the No Action Alternative, the existing transmission line would not be rebuilt, and, therefore, the impacts related to the construction of the Rebuild Project would not occur. Operation and maintenance activities would continue and would be similar to existing conditions, as described in Section 2.1.3. Maintenance activities would likely increase as existing structures deteriorate, and more structure repair and replacement could be required. Maintenance of access roads would be needed and access road work proposed under the Rebuild Project would likely need to take place as an operations and maintenance activity. Maintenance activities would result in low to moderate impacts on wetlands, depending on the type of work, quality of wetland, and extent of impacts. Impacts would be similar to the impacts described above.

This page left intentionally blank.

3.8 FLOODPLAINS

3.8.1. Affected Environment

The study area for ***floodplains*** includes the ***100-year floodplains*** intersected by the existing right-of-way, danger tree removal area adjacent to the right-of-way, and access roads where work would be conducted. The Federal Emergency Management Agency identifies areas with a 1% chance of being flooded in a given year as 100-year floodplains.

Within the study area, waterways with 100-year floodplains include Johnson Creek, Crooked Creek, Twomile Creek, South Twomile Creek, Fourmile Creek, and Bethel Creek in Coos County; and Floras Creek, Sixes River, Elk River, Hubbard Creek and Euchre Creek, in Curry County (Figures 3.6-1 through 3.6-4).

3.8.2. Environmental Consequences—Proposed Action

The Proposed Action has the potential to directly affect floodplains and impair floodplain functions from construction disturbance associated with structure removal and installation and access road work. Table 3.8-1 lists construction work that would be done in floodplains. No new access roads would be constructed within floodplains and no new structures would be placed in floodplains. No danger trees would be removed within floodplains. Activities that would occur within floodplains include:

- removal and replacement of six existing structures,
- reconstruction of 800 feet (0.15 mile) of existing access roads,
- replacement of two culverts, and
- improvement of 750 feet (0.14 mile) of existing access roads.

Removing existing structures and augering holes for replacement structures would result in the deposition of some excavated soils on the soil surface, soil compaction and vegetation removal within the floodplain. Placement of tensioning sites within floodplains would be avoided, if possible. If unavoidable, placement of tensioning sites within floodplains would result in additional soil compaction. Soil compaction could interfere with the subsurface water flow in the floodplain, while vegetation removal could destroy some habitat and hinder the capacity of the floodplain to dissipate water energy during floods. Both of these actions could lead to erosion. Effects from transmission line construction within floodplains would be temporary and localized, only minimally altering floodplain functions; therefore, this would be a low impact.

Direct floodplain impacts from access road work within floodplains would result from activities such as grading or rocking of road surfaces, replacement of culverts, and vegetation removal. These activities could result in minor soil compaction and erosion. These impacts would not result in significant changes to floodplain capacity nor would they alter flood flows. Therefore, direct impacts from access road work within floodplains would be low.

Table 3.8-1. Proposed Work within 200 Feet of 100-Year Floodplains

Floodplain	Structures		Proposed Access Road Work	
	In Floodplain	Within 200 Feet of Floodplain	In Floodplain	Within 200 Feet of Floodplain
Johnson Creek	None	None	None	Improve 200 feet
Crooked Creek	None	None	None	Reconstruct 200 feet
Twomile Creek	None	Existing Structure 5/2	None	None
South Twomile Creek	None	None	None	None
Fourmile Creek	None	None	None	None
Bethel Creek	None	None	None	None
Floras Creek	Existing Structures 14/4 and 14/5	None	Improve 50 feet	Reconstruct 200 feet
Sixes River	None	None	None	Reconstruct 200 feet Improve 200 feet
Elk River	Existing Structures 24/3, 24/4, 24/5	Existing Structure 24/6	Reconstruct 800 feet Replace two culverts	Reconstruct 1400 feet Improve 1200 feet
Hubbard Creek	None	None	Improve 700 feet	Improve 600 feet
Euchre Creek	Existing Structure 40/5	Existing Structure 40/4	None	None
TOTALS	**Six structures**	**Three structures**	**Reconstruct 800 feet (0.15 mile) of access road** **Improve 750 feet (0.14 mile) of access road** **Replace two culverts**	**Reconstruct 2,000 feet (0.38 mile) of access road** **Improve 2,200 feet (0.42 mile) of access road**

Indirect impacts on floodplains could result from construction activities and vegetation removal within 200 feet of floodplains. Increased sedimentation could result from erosion associated with ground disturbance and vegetation removal. Activities that would occur outside of but within 200 feet of floodplains are presented in Table 3.8-1 and summarized below.

- Remove and replace three existing wood-pole structures.
- Remove 6 danger trees along Johnson Creek.
- Reconstruct 2,000 feet (0.38 mile) of existing access roads.

- Improve 2,200 feet (0.42 mile) of existing access roads.

Installation of structures and access road work within 200 feet of floodplains could cause erosion and the deposition of soils in floodplains. Implementation of mitigation measures, including minimizing work areas, installing erosion and sediment control measures, working during the dry season as much as possible, and revegetation of work sites would minimize sediment deposition into floodplains. The amount of sediment deposited from work within 200 feet of floodplains would not change existing flood-storage capacity or alter the course of floodwaters. Impacts are expected to be low and limited to incidental amounts of sediment deposition in the floodplain from soil erosion in disturbed areas.

The six danger trees near the Johnson Creek floodplain would be cut with roots left intact. Erosion is not expected from removal of these trees. Therefore, there would be very low impacts on floodplains from danger tree removal.

Operation and maintenance activities within and near floodplains could result in direct and indirect impacts to floodplains. Direct floodplain impacts from routine maintenance activities would result from road work on access roads within floodplains. Periodic maintenance of these access roads, including grading or rocking of road surfaces, replacement of culverts, and vegetation removal, could result in minor soil compaction and erosion. Structure work within floodplains would include repair, removal, and replacement of structures and associated hardware, when needed. Removal of vegetation that causes soil disturbance, such as removal of gorse, could result in the deposition of sediments into floodplains. Impacts are expected to be low and limited to incidental amounts of sediment deposition in the floodplain from soil erosion in disturbed areas. These impacts would not result in significant changes to floodplain capacity nor would they alter flood flows.

3.8.3. Mitigation—Proposed Action

If the Proposed Action is implemented, BPA would implement the following mitigation measures to avoid, minimize, or compensate for impacts on floodplains.

- Conduct peak construction activities during the dry season (between June 1 and November 1), as much as possible, to minimize erosion, sedimentation, and soil compaction.
- Avoid placement of new structures and new access roads in floodplains.
- Minimize the number of access roads used within floodplains by retiring roads from BPA use within floodplains, where possible.
- Locate tensioning sites at least 200 feet away from surface waters, including wetlands, and outside of 100-year floodplains, if possible.~~Include the locations of 100-year floodplains on project maps for contractors and avoid placing tensioning sites within floodplains, if possible.~~
- Delineate construction limits within 200 feet of streams, other waterbodies, wetlands, and floodplains; manage sediment as specified in the SWPP Plan, with ~~a sediment fence, straw wattles, or a similarly~~an approved method that meets the *Stormwater Management Manual for Western Washington* (Washington State Department of Ecology 2005) erosion and stormwater control best management practices, to eliminate sediment discharge into waterways and wetlands, minimize the size of construction disturbance areas, and minimize removal of vegetation, to the greatest extent possible.

- Inspect erosion and sediment controls weekly, maintain them as needed to ensure their continued effectiveness, and remove them from the site when vegetation is re-established and the site has been stabilized.
- Reseed disturbed areas after construction and regrading are complete, at the appropriate time period for germination, with a native seed mix, a seed mix ~~approved~~ recommended by ODFW, or a seed mix identified in the *Stormwater Management Manual for Western Washington* (Washington State Department of Ecology 2005), or as agreed upon with landowners for use on their property.
- Monitor seed germination of seeded areas with at least three field visits per year until site stabilization (defined as at least 70% cover by native or acceptable nonnative species) is achieved; if vegetative cover is inadequate, implement contingency measures and reseed to ensure adequate revegetation of disturbed soils.
- Inspect and maintain access roads, culverts, and other facilities after construction to ensure proper function and nominal erosion levels.
- Cut danger trees in the Johnson Creek floodplain without disturbing tree roots.

3.8.4. Unavoidable Impacts Remaining After Mitigation—Proposed Action

Implementation of the mitigation measures described above would reduce impacts on floodplains, but would not completely eliminate impacts. Direct floodplain impacts from structure removal and replacement and access road work within floodplains could result in minor soil compaction and erosion. Installation of structures and access road work near floodplains could cause erosion and a deposition of sediments in floodplains. Because the area within floodplains that would be affected by the Proposed Action is relatively small and these impacts would not result in significant changes to floodplain capacity or alter flood flows, unavoidable impacts remaining after mitigation would be low.

3.8.5. Cumulative Impacts—Proposed Action

Past, present, and future activities in the project vicinity that have cumulatively adversely affected floodplains include utility and road construction and maintenance, agricultural activities, logging, and recreational and residential development. Impacts could include increased compaction or erosion of 100-year floodplains. Overall, the Proposed Action is not expected to contribute noticeably to cumulative changes in floodplain qualities and function, due to the small area that would be affected.

3.8.6. Environmental Consequences—No Action Alternative

Under the No Action Alternative, the existing transmission line would not be rebuilt, and, therefore, the impacts related to the construction of the Rebuild Project would not occur. Operation and maintenance activities would continue and would be similar to existing conditions, as described in Section 2.1.3. Maintenance activities would likely increase as existing structures deteriorate, and more structure repair and replacement could be required. Maintenance of access roads would be needed and road work proposed under the Rebuild Project would likely need to take place as an operations and maintenance activity. Structure and access road work in floodplains would occur but would be limited because most structures and access roads are located outside floodplains. Removal of vegetation could occur within floodplains, but

would likely only be small areas as part of weed control activities or individual danger trees. The maintenance activities would result in low impacts on floodplains, similar to the impacts described above.

This page left intentionally blank.

3.9. FISH

3.9.1. Affected Environment

The study area for fish includes riparian and aquatic areas that provide habitat for fish species that may be directly or indirectly affected by the Proposed Action. Activities within 200 feet of streams were considered to have the potential to affect fish species and fish habitat. Effects up to 500 feet downstream from work areas were considered due to the potential for the temporary degradation of downstream aquatic habitat conditions from the introduction of fine sediments.

Information on fish presence in study area streams was obtained from interviews with fish biologists from ODFW and NMFS, published literature, and databases. Field investigations also were conducted to verify habitat presence.

The study area lies within 12 subbasins along the Oregon South Coast. Fish species that occur in the study area include coho salmon, Chinook salmon, steelhead, and coastal cutthroat trout (Appendix G). Coastal cutthroat trout are the most common fish species, occurring in most coastal streams, although their distribution is limited by fish passage barriers on many of the smaller streams. Pacific lamprey and some other resident fish species also occur in the study area.

High quality freshwater habitat for spawning, rearing and migration is critical to the recovery and survival of declining salmon populations. Degradation of freshwater habitats has occurred in the project vicinity as a result of land uses that directly or indirectly affect streams and water quality. The quality of fish habitat in the project vicinity varies. Some coastal streams are degraded by sedimentation due to nearby land uses, and some have been physically altered and have fish passage barriers. A variety of land uses that remove or degrade vegetation has resulted in a range of riparian habitat quality within the project vicinity.

Essential Fish Habitat

Both Chinook and coho salmon, which are protected under the amended Magnuson-Stevens Fishery Conservation and Management Act (see Section 4.2.3), occupy streams in the study area. The act designates essential fish habitat (EFH) for these species, pursuant to Amendment 14 to the *Pacific Coast Salmon Plan*, Appendix A: Description and Identification of Essential Fish Habitat, Adverse Impacts and Recommended Conservation Measures for Salmon (Pacific Fishery Management Council 1999). Streams and wetlands in the project vicinity provide waters and substrate necessary to coho and Chinook salmon for spawning, feeding, and growth to maturity. BPA is currently in preconsultation with NMFS concerning project activities that may adversely affect EFH.

Most streams in the study area are designated EFH for coho and Chinook salmon, except for the streams in the northernmost portion of the study area (Rosa, Johnson, Crooked, and China Creeks). Coho and Chinook salmon are not present in most of the streams that cross the right-of-way due to natural or constructed fish passage barriers, but EFH generally exists downstream of the right-of-way.

Coho Salmon and Coho Salmon Designated Critical Habitat

Two evolutionarily significant units (ESUs) of coho salmon that occur in the study area are federally listed as ***threatened*** under the ESA: the Oregon Coast (OC) coho ESU extends northward from the Sixes River and the Southern Oregon/Northern California Coasts (SONCC) coho ESU extends southward from the Elk River (Appendix G). Critical habitat for coho salmon is discussed below. Pursuant to the requirements of Section 7(c) of the ESA, BPA prepared ~~is preparing~~ a biological assessment (BA) that addresses project effects on OC and SONCC coho salmon and their designated critical habitat. BPA is currently in ~~pre~~consultation with NMFS.

The OC coho ESU includes all naturally spawned populations of coho salmon in Oregon coastal streams south of the Columbia River and north of Cape Blanco. Four historical populations of OC coho occur in the study area—Johnson Creek, Twomile Creek, Floras Creek/New River, and Sixes River. The Johnson Creek population is a historical population that has not been documented since the mid-1990s (Claire pers. comm.)

The SONCC coho ESU includes all naturally spawned populations in Oregon coastal streams south of Cape Blanco to Punta Gorda, California. Six historical populations of SONCC coho have been identified in the study area—Elk River, Mill Creek, Hubbard Creek, Brush Creek, Mussel Creek and Euchre Creek (Williams et al. 2006). The Hubbard Creek and Euchre Creek populations have been classified as ephemeral populations that do not receive sufficient immigration and do not have a high likelihood of sustaining themselves over a 100-year time period in isolation. The habitat supporting an ephemeral population is expected to be rarely occupied.

Along most streams, the proximity of coho salmon to the right-of-way is not precisely known. Fish passage barriers, both natural (steep gradients and low water flow) and human-made (impassable culverts), exist throughout the study area, preventing upstream distribution of coho to the headwaters. BPA relied on current and historical fish distribution data from ODFW and NMFS, as well as interviews with staff from both agencies to determine coho presence (Confer pers. comm.; Claire pers. comm.; Collins pers. comm.).

Designated critical habitat for OC coho and SONCC coho consists of the water, substrate, and adjacent riparian zone riverine reaches, including off-channel habitats below longstanding, naturally impassable barriers such as natural waterfalls in existence for at least several hundred years. The primary constituent elements (PCEs) of critical habitat are biological or physical habitat features essential for the conservation of the ESU. The PCEs that may be present within the study area include: freshwater spawning sites that support spawning, incubation, and larval development; freshwater rearing sites that enable juvenile salmon to forage, grow, and develop; and freshwater migration corridors that enable fish to successfully avoid predators and swim upstream to reach spawning areas on limited energy stores.

3.9.2. Environmental Consequences—Proposed Action

Direct impacts on fish could occur where construction takes place within or near fish-bearing streams (Appendix G). Direct impacts on fish are unlikely as a result of construction activities associated with structure removal and replacement, because most structures are not close to streams, and construction equipment used for structure work would not enter fish-bearing

streams. However, direct impacts on fish could occur as a result of installation of ~~new and~~ replacement culverts within fish-bearing streams.

Culvert work proposed in ~~five~~ two fish-bearing streams would be designed to enable fish passage using ~~either~~ NMFS (2008) criteria (Table 3.9-1). ~~or ODFW (2004) criteria (Table 3.9-1).~~ Three culvert replacements that were proposed for fish passage would not be installed for the following reasons.

- Application of NMFS fish passage criteria to a proposed culvert replacement in Twomile Creek was problematic because of a 13% slope between the culvert inlet and outlet. Because the existing culvert is functional, it will not be replaced.
- The proposed culvert replacement using ODFW criteria was removed from the Rebuild Project, because BPA was unable to obtain an easement from the landowner to use the road leading to this crossing. Therefore, BPA does not propose to use this crossing and has identified alternative access that would not require crossing a fish-bearing stream.
- The proposed culvert replacement in Brush Creek using NMFS criteria was removed from the Rebuild Project, because this crossing is not essential to access the right-of-way. Therefore, BPA does not propose to use this crossing and it is not necessary to replace the failed culvert at this crossing.

An existing ford in Indian Creek, a fish-bearing stream, would be replaced with a bridge, and there would be no instream work.

Table 3.9-1. Criteria Used for Design of Culverts in Fish-Bearing Streams

Type of Instream Work	Stream Name	NMFS Criteria (Coho Presence) or ODFW Criteria (Fish-Bearing)
~~Culvert replacement~~	~~Lower Twomile Creek~~	~~NMFS criteria~~
~~Culvert replacement~~	~~Boulder Creek~~	~~ODFW criteria~~
~~Arch culvert replacing existing ford~~	~~Indian Creek~~	~~NMFS criteria~~
Culvert replacement	Bagley Creek	NMFS criteria
Culvert replacement	Tributary to Hubbard Creek	NMFS criteria
~~Culvert replacement~~	~~Tributary to Brush Creek~~	~~NMFS criteria~~

~~One additional culvert would be installed in a creek upstream of an existing fish passage barrier that may be removed in the future; therefore, the culvert would be designed to implement NMFS fish passage criteria to provide passage for fish if the downstream barrier is removed.~~ Culvert installation in fish-bearing streams would require the construction of cofferdams upstream and downstream of the work area and the exclusion or removal of fish prior to dewatering (if water is present during construction). Impacts on fish, including disturbance, injury, or mortality could occur due to installation of cofferdams, excluding or handling fish, and construction-related noise. With the implementation of mitigation and conservation measures, direct impacts on fish from culvert work in fish-bearing streams would be low to moderate.

Excavation within stream channels for installation of new and replacement culverts would dislodge sediment, temporarily elevating downstream levels of suspended sediments once fall rains begin. Small pulses of sediment could continue to flush downstream during bankfull flows for the next several months until all disturbed materials in the construction area are dispersed and settled. Temporary water quality degradation due to culvert work could reduce survival of eggs and alevins that are downstream of work areas. Increased turbidity could also lead to abrasion, gill injury, decreased feeding success due to reduced visibility, degradation of spawning gravels, increased egg and fry mortality, and reduced fry growth rates. Increased turbidity could also affect aquatic prey. Installation of culverts during the ODFW-approved instream work period would minimize sedimentation.

All culvert work would be done within existing channels and is not expected to change the natural hydrology. The correct sizing of culverts would allow the stream to flow naturally, unimpeded by artificial narrowing of channels. Indirect impacts on fish and fish habitat would be low to moderate depending on the proximity of the proposed activity to fish-bearing streams.

The Proposed Action could have indirect impacts on fish by adversely affecting water quality from increased erosion and sedimentation. Work associated with rebuilding the transmission line, conducting road work, and conducting ongoing operation and maintenance activities that would occur in or near fish-bearing streams has the potential to result in increased erosion. Work on structures within 200 feet of streams would have the potential to affect fish habitat. Work within 200 feet of streams is presented in Appendix E. Of the 45 structures that would be installed within 200 feet or less of streams, 12 structures would be installed within 100 feet of streams and of these, 2 structures would be installed approximately 50 feet from streams. Beyond 200 feet, existing vegetation between the stream and work areas would provide an adequate filter to prevent sediments from reaching streams. With the implementation of mitigation measures, indirect impacts on fish and fish habitat from construction activities near fish-bearing streams would be low to moderate.

Danger tree removal near streams could also indirectly affect water quality, as described in Section 3.6, Waterways and Water Quality, of this EA. A total of 120 danger trees would be removed within 200 feet of streams. Because danger trees would be cut and roots would not be disturbed, erosion would be minimal and sediments are not expected to reach streams. Nonetheless, where the removal of danger trees along streams would decrease cover and shading along portions of these streams, this removal could incrementally contribute to increases in stream temperatures.

Increases in stream water temperatures could result from vegetation removal in riparian areas during construction. To mitigate for any increases in water temperature, vegetation removal would be minimized and off-site stream restoration would be conducted along three temperature-impaired waterways in the project vicinity.

As discussed in Section 3.6, Waterways and Water Quality, of this EA, seven streams in the study area are identified by ODEQ as impaired for temperature. Of these streams, danger tree removal is not proposed within 200 feet of the following five streams: Johnson Creek, Butte Creek, Floras Creek, Willow Creek, and the Elk Rover. Due to this distance, there would be no effect on stream temperatures at these streams from danger tree removal. Danger tree removal would be conducted within 200 feet of tributaries of Indian Creek and Euchre Creek, which are

the two other streams that have been identified as impaired for temperature. One danger tree would be removed approximately 100 feet from a tributary to Indian Creek and three danger trees would be removed approximately 100 feet from the headwaters of a tributary of Euchre Creek. Given the extremely small amount of cover that would be removed, removal of these four trees would not expected to measurably increase water temperatures to a level that could affect fish. Therefore, indirect impacts on fish and fish habitat from danger tree removal would be low.

BPA would implement weed control efforts prior to, during, and after construction, as needed. Some weed species occur in riparian areas, such as the Japanese knotweed infestation along Hubbard Creek. The removal of weed species may decrease cover, although not as much as the removal of trees and shrubs. The use of herbicides near aquatic areas can affect water quality, but only herbicides approved for work near water would be used. Given the beneficial effect of weed control in riparian areas, the indirect effects of weed control on fish would be low.

Effects on Essential Fish Habitat

The Proposed Action has the potential to adversely affect Pacific coast salmon EFH. As discussed above, construction activities and vegetation removal could result in temporary disturbances to freshwater aquatic habitat through the increase in sedimentation and an increase in water temperature. The areas of disturbance are relatively small in scale compared with the amount of habitat available to coho and Chinook salmon within these watersheds. However, with the implementation of mitigation, project activities are not likely to reduce the abundance or distribution of coho or Chinook salmon or to adversely modify the ecosystem to the extent that measurable effects on spawning, feeding, or growth to maturity for coho or Chinook salmon would result. Therefore, impacts on EFH would be low.

Effects on Coho Salmon

Direct effects on OC coho and SONCC coho salmon could result from culvert installation in locations where coho may be present. Instream work could adversely affect any coho that are present during construction by increasing levels of stream sedimentation at and downstream of the project site. Furthermore, implementation of fish salvage plans and work area isolation at ~~four~~ two culvert work locations where coho could be present has the potential for the incidental ***take*** of a small number of individual fish through fish handling. The implementation of mitigation measures, as agreed upon with NMFS through Section 7 consultation, would avoid or minimize any incidental take to the greatest extent practicable.

Indirect effects on coho salmon could result from construction and vegetation removal that results in sediment contribution to coho-bearing streams, as discussed above. Most project work areas are near headwater streams, where coho are not present due to natural and human-made fish passage barriers. Implementation of mitigation measures would reduce erosion and sedimentation, decreasing effects on coho salmon.

With implementation of mitigation measures, it is reasonably certain that the Rebuild Project would not reduce the abundance or distribution of coho within the OC and SONCC coho ESUs, and would not significantly reduce the likelihood of survival and recovery of these coho ESUs. Therefore, impacts on OC coho and SONCC coho would be moderate.

The Proposed Action could result in impacts on OC and SONCC coho designated critical habitat. PCEs that could be affected include spawning areas, juvenile rearing areas, and migration corridors. The potential effects on designated critical habitat due to Rebuild Project implementation are as follows.

- No direct effects on **spawning areas.** Temporary indirect effects could result from sedimentation at one new culvert site and downstream of four culvert replacement sites, which would be minimized through implementation of mitigation measures. Long-term beneficial effects would result from improved drainage and from improved overall habitat conditions at and downstream of the new and replacement culverts.
- No direct effects on **juvenile rearing areas.** Temporary indirect effects could result from sedimentation and removal of riparian vegetation, which would be minimized through implementation of mitigation measures. Beneficial long-term direct effects due to improved off-channel juvenile overwinter rearing habitat (ford improvement) and overall improved habitat conditions due to improved drainage.
- Beneficial long-term direct effect on **migration corridors** by opening up access to historical coho habitat at two ~~five new or~~ replacement culverts designed for passage of all life stages of anadromous fish. Temporary indirect effects could result from sedimentation and removal of riparian vegetation, which would be minimized through implementation of mitigation measures.

With the implementation of mitigation measures to avoid or minimize effects, OC and SONCC coho designated critical habitat within the study area would not be degraded, thus critical habitat would not be adversely modified. Therefore, impacts on designated critical habitat would be low to moderate.

3.9.3. Mitigation—Proposed Action

If the Proposed Action is implemented, BPA would implement the following mitigation measures to avoid or minimize impacts on fish and fish habitat. The mitigation measures in Section 3.5, Vegetation, of this EA are relevant to mitigation of impacts on fish and fish habitat.

- Avoid siting new structures and access roads within 200 feet of streams and wetlands during the design process, where possible.
- Retire an existing access road over Bethel Creek to avoid a bridge replacement and access road work in coho salmon habitat.
- Design culverts that would be installed in fish-bearing streams to meet fish passage criteria, in consultation with ODFW and NMFS.
- Explain fish-related mitigation measures and permit conditions to construction contractors and inspectors during a preconstruction meeting covering environmental requirements.
- Conduct weed control in riparian areas using procedures that prevent the introduction of toxic herbicides into aquatic areas, and use herbicides approved for use near aquatic areas.
- Implement mitigation measures for all work conducted in or near coho salmon and Chinook salmon habitat, as agreed upon in consultation with NMFS.
- Conduct off-site stream restoration along three temperature-impaired waterways in the project vicinity to mitigate for any increases in water temperature that could result from vegetation removal.

3.9.4. Unavoidable Impacts Remaining After Mitigation—Proposed Action

Implementation of the mitigation measures described above would reduce impacts on fish and fish habitat, but would not completely eliminate them. Some temporary impacts on fish and fish habitat would still occur as a result of construction noise and activity and any increase in turbidity and sedimentation. Effects related to sedimentation are expected to be temporary and localized, initially moderate in intensity, then decreasing to low as sedimentation decreases. Fish habitat could be degraded from an increase in water temperature due to vegetation removal near streams, a low impact. Some fish could be harmed during instream work at new and culvert replacement sites due to implementation of fish salvage plans and work area isolation. The implementation of mitigation measures, as agreed upon with NMFS through Section 7 consultation, would avoid or minimize any incidental take to the greatest extent practicable, resulting in moderate impacts.

3.9.5. Cumulative Impacts—Proposed Action

Past, present, and future actions in the project vicinity have cumulatively affected fish and fish habitat through destruction and modification of habitat, limiting access to habitat through the installation of fish passage barriers, and degradation of water quality. These actions include forestry, farming, ranching, recreational and commercial fishing, and weed-control activities that expose and disturb the ground surface near streams. They also include utility and road construction and maintenance including the BPA Fairview-Rogue Roads Improvement Project, BPA's periodic vegetation management activities, and ongoing local and state road and bridge maintenance activities. Future state and private activities are expected to continue at similar intensities as in recent years. The Proposed Action would temporarily contribute in a minor way to the cumulative impact on fish and fish habitat. However, the Proposed Action likely would reduce some cumulative impacts through beneficial effects from removing some fish passage barriers and thereby restoring access to historical fish habitat and from improving access roads, decreasing the amount of sediment delivered to streams.

3.9.6. Environmental Consequences—No Action Alternative

Under the No Action Alternative, the existing transmission line would not be rebuilt, and, therefore, the impacts related to construction of the Rebuild Project would not occur. Operation and maintenance activities would continue and be similar to existing conditions, as described in Section 2.1.3. Maintenance activities would likely increase as existing structures deteriorate and more structure repair and replacement could be required compared to existing conditions. Maintenance of access roads would be needed and road work proposed under the Rebuild Project would likely need to take place as an operations and maintenance activity. The removal of danger trees and other tall-growing vegetation along streams would continue to affect water quality, and could result in low to moderate impacts, depending on the amount of vegetation and the proximity to streams. Operations and maintenance activities would result in low to moderate impacts on fish and fish habitat, primarily associated with degradation of water quality.

This page left intentionally blank.

3.10. WILDLIFE

3.10.1. Affected Environment

The study area for all wildlife species includes the transmission line right-of-way and access road easements with a 0.25-mile-wide buffer. For northern spotted owl, marbled murrelet, and eagles, this buffer was extended to 2 miles beyond the right-of-way and access road easements.

Information on wildlife in the study area was obtained from ODFW and U.S. Fish and Wildlife Service (USFWS) biologists, as well as from published literature and databases, including the Oregon Natural Heritage Database (Oregon Natural Heritage Information Center 2009, 2010). To determine which wildlife species would potentially use the study area, all species known to occur within 1 mile of the transmission line corridor and road easements were considered. Field investigations also were carried out to verify species and potential habitat presence.

Various types of wildlife habitat occur in the study area. As discussed in Section 3.5, Vegetation, of this EA, the principal vegetation cover types include coastal shrubland and forest, upland pasture, mixed coniferous/evergreen broadleaf forest, and riparian and wetland areas. Vegetative cover and, therefore, wildlife habitats in the study area have been extensively modified by a variety of land uses, including grazing, logging, cranberry farming, tree farming, road and utility corridor construction, and residential development.

Open pasture areas and some shrub communities in the right-of-way provide grazing habitat for black-tailed deer and elk. Wildlife grazing habitat has been degraded in some areas due to the abundance of nonnative plants, especially gorse, which reduces or eliminates grazing potential and creates barriers to the movement of large mammals. Because some landowners have been diligent in preventing the introduction of weed species, their lands are especially valuable for grazing animals. While few forested areas remain within the right-of-way due to vegetation management activities, some deep canyons remain forested and provide cover and food for grazing animals.

Intact riparian and wetland areas provide habitat for most wildlife species found in the study area, as well as for riparian species including beaver, muskrat, river otter, and mink; a wide variety of birds; and common amphibians. A wide variety of bird species may frequent riparian areas, but are expected to use all cover types, both for nesting and for foraging. Many of the smaller wildlife species migrate up and down slope, often using riparian corridors for movement. In some farmed areas, at road crossings, and within utility crossings riparian vegetation has been altered and in some areas woody species have been removed.

Some right-of-way areas, such as cranberry farms, provide limited functions as potential wildlife habitat. Approximately 2.1 miles of the right-of-way are occupied by cranberry bogs, which generally extend beyond the right-of-way. Cranberry bogs and their associated berms and roads offer little habitat for wildlife other than songbirds, which may forage for terrestrial and flying insects on and over the bogs.

Other wildlife species known to occur in the study area include cougar, coyote, raccoon, striped skunk, porcupine, grey fox, brush rabbit, rodents, snakes, western fence lizards, nonnative turtles

such as the red-eared slider, and a diverse array of invertebrates. In addition, numerous migratory bird species use the study area.

Certain bird species that could be prone to collisions with power lines are known to occur within the study area (Meyer 1978; James and Haak 1979; Beaulaurier 1981; Beaulaurier et al. 1982; Faanes 1987). Portions of the right-of-way with a higher potential for avian (bird) collisions include segments of the transmission line that cross open water, broad expanses of wetlands, and floodplains. These areas attract both resident and migratory birds that fly into the areas to rest and feed. Aleutian cackling geese, which migrate through the study area, are known to congregate in three waterways within the study area (Love pers. comm.; Edwards pers. comm.) Birds that fly at dawn and dusk such as marbled murrelet may be at higher risk of collisions because of the low light conditions. Some species, such as raptors, seem to be at low risk for collisions (Olendorff and Lehman 1986).

Special-Status Species

Special-status species with the potential to occur within the study area are listed in Table G-1 (Appendix H). Based on occurrence data, information obtained from field surveys, and information from biologists with expertise in Oregon South Coast wildlife, a determination was made whether or not these species are likely to occur within the study area. Eagles, northern spotted owl, and marbled murrelet are discussed in detail below.

Eagles

Eagles are protected under the Bald and Golden Eagle Protection Act. The Oregon Natural Heritage Database has records of three known bald eagle nests within 2 miles of the right-of-way, located along the Rogue River, Lower Twomile Creek, and Floras Lake. Bald eagle sitings have occurred within or near the study area near Langlois Mountain (Vileisas pers. comm.). ODFW wildlife biologists stated that it is likely that bald eagles use the study area (Edwards pers. comm.; Love pers. comm.). USFWS provided updated information on bald eagle status in the study area (Maurice pers. comm.). The closest known active bald eagle nest is approximately 1,600 feet east of the transmission line.

There are no known golden eagle nests within 2 miles of the right-of-way, although golden eagles are known to nest in the Coast Range. Golden eagle sitings have occurred within or near the study area near Bethel Mountain (Maurice pers. comm.).

Northern Spotted Owl

The northern spotted owl is listed as threatened under the federal and state ESA. Northern spotted owl nesting sites are not known to occur within 2 miles of the study area. Designated critical habitat for northern spotted owl does not occur within the study area. The nearest designated critical habitat is approximately 5 miles east of the right-of-way.

Although observations of northern spotted owl have not been reported in the study area, five areas of suitable habitat were identified within 1 mile of the study area (Turnstone Environmental Consultants 2011). Suitable habitat areas for northern spotted owl were identified using protocol recommended by USFWS. Because it is not known if northern spotted owls are nesting in these suitable habitat areas, they are assumed to be occupied for purposes of ESA consultation with USFWS.

One landowner in the project vicinity, who lives near an area identified as suitable habitat for northern spotted owl, reported seeing two adult owls and one juvenile owl on his property. (See Comment 10027, Chapter 8). He provided a photograph of an owl that may be a northern spotted owl, but could not be positively identified.

The spotted owl critical breeding period is from March 1 through July 7, and the late breeding period is from July 8 through September 30. To successfully nest, spotted owls require trees that provide suitable nesting structures and shelter. This habitat must be surrounded by suitable roosting and foraging habitat.

Marbled Murrelet

Marbled murrelet is listed as threatened under the federal and state ESA. Three known marbled murrelet sites are located within 2 miles of the study area. One is located to the west of the right-of-way and two are located to the east of the right-of-way. Marbled murrelet were last observed at these sites in 1989, 1990, and 1995. Marbled murrelet have been observed flying through the study area, west of one of the nest sites (Vileisas pers. comm.). Designated critical habitat for marbled murrelet consists of terrestrial nesting habitat. The nearest designated critical habitat is approximately 0.4 mile east of the right-of-way.

Suitable habitat areas for marbled murrelet were identified using protocol recommended by USFWS. Nine suitable habitat areas for marbled murrelet were identified within 1 mile of the study area (Turnstone Environmental Consultants 2011). Trees with potential nesting platforms are scattered or clumped within suitable habitat areas. Because it is not known if marbled murrelet are nesting in these suitable habitat areas, they are assumed to be occupied for purposes of ESA consultation with USFWS.

During the marbled murrelet summer nesting season, April 1 through August 5 (critical breeding period) and August 6 through September 15 (late breeding period), marbled murrelet nest in old-growth trees within 50 miles of the Pacific coast. Older forests with protective buffer zones may be preferred by marbled murrelet for nesting, because they have fewer edge effects, less wind, and a lower risk of nest predation. Marbled murrelet lay eggs on conifer limbs, known as nesting platforms, which can be composed of a wide bare branch, moss or lichen covering a branch, mistletoe, or other deformities (Evans Mack 2003). Marbled murrelet forage at sea and fly inland to nesting areas, often using waterways as flight corridors. Although marbled murrelet may fly along waterways, it is assumed that due to the topography in the project vicinity, that they may take any convenient path to the ocean or back inland (Vileisas pers. comm.; Love pers. comm.; Edwards pers. comm.)

3.10.2. Environmental Consequences—Proposed Action

Direct and indirect impacts on wildlife could result from construction and operations and maintenance activities that result in modification, loss, and degradation of habitat. Increased noise and activity levels could result in temporary displacement of wildlife near work areas. Impacts could also result from danger tree removal and the potential for avian collisions with the transmission line.

Habitat modification could occur from replacement of existing structures and improvements to existing access roads. Construction would result in a temporary loss of existing vegetation that has been subject to ongoing periodic vegetation management activities. Vegetation clearing along access roads and within the right-of-way also would modify habitat. Impacts on wildlife would be low, because habitat modification would be temporary and would occur within areas where vegetation is managed on an ongoing basis.

Habitat loss would occur from the installation of structures in areas where structures currently do not exist and from construction of new access roads. Although these activities would convert some previously undeveloped habitat to structure sites and access roads, the area that would be lost would be relatively small compared to existing wildlife habitat. Construction of less than 1 mile of new roads is proposed. Only 19 new structures would be added to the transmission line, within the existing right-of-way. This minimal loss of habitat is not expected to adversely affect the viability or survival of species at the population level. Therefore, direct impacts from loss of habitat would be low to moderate.

Degradation of wildlife habitat could occur if noxious weeds establish themselves in the areas disturbed by construction activities. Nonnative plants provide poor forage for grazing animal, and impenetrable thickets of gorse and other weed species can impede wildlife movement. Because weed control activities will be conducted (See Section 3.5, Vegetation, of this EA) degradation of habitat below existing conditions is not expected. Therefore, impacts on wildlife habitat from degradation of habitat would be low with implementation of appropriate weed control measures.

Construction would result in increased noise and activity levels, which could temporarily displace wildlife near work areas. Increased noise would result from the use of heavy equipment and helicopters to remove and install structures, string conductor, and conduct access road work. Noise from construction activities along the right-of-way would represent a temporary increase over ambient noise conditions. On access roads requiring travel but no road work, noise and activity levels during Rebuild Project activities would increase only slightly or not increase compared to existing conditions.

Impacts from noise and activities would vary depending on the proximity of construction areas to wildlife and the duration of the noise disturbance. Wildlife would likely avoid construction areas during construction activities. Because the study area is near U.S. 101, some animals living in the vicinity may already be habituated to sound associated with motorized vehicles, reducing their susceptibility to construction noise. Because impacts from noise and activity are temporary and wildlife would be expected to return after construction is complete, impacts would be moderate.

Danger trees of various sizes and species would be removed under the Proposed Action. Some danger trees that would be removed are located in riparian areas. Wildlife, especially nesting birds, could be temporarily displaced by the removal of danger trees. Danger tree removal would not be conducted until after August 15 to minimize displacement of nesting birds. Because most of the study area is forested, it is unlikely that nesting habitat is limited by the availability of suitable trees for use as roosts, perches, nests, or foraging locations. Thus, the impacts of danger tree removal on wildlife species would be low to moderate.

Birds could collide with conductors and structures. The following design features of the proposed transmission line could affect the potential for avian collisions.

- The north-south alignment of this transmission line makes it less of a problem to migratory birds than an east-west alignment.
- The spacing of conductors on 115-kV transmission lines is far enough apart that electrocution of raptors and large birds is generally not a problem as it is with distribution lines.
- Most of the new and replacement wood-pole structures would be slightly taller (in the range 5 to 30 feet) than existing Bandon-Rogue transmission line structures. Taller structures could slightly increase the risk of birds colliding with structures, particularly for resident birds who are accustomed to existing heights. However, because the transmission line is adjacent, for almost all of its length, to the existing 230-kV Fairview-Rogue transmission line, which has taller structures and conductor, resident birds may be accustomed to avoiding this portion of the air space.
- The proposed conductor would be approximately 0.5 inch larger and shinier and more reflective than the existing conductor. The new conductor may be more visible to birds, which would decrease the potential for avian collisions with the conductor.

The potential for avian collisions would be minimized by the ~~placement of bird diverters on conductor that spans waterways.~~ installation of spiral bird diverters on conductor within six areas with wide spans over waterways that are likely to be frequented by birds, including Aleutian cackling geese, marbled murrelet, and other species. Spiral bird d~~D~~iverters could make conductors more visible. BPA consulted with ODFW and identified six areas where spiral bird diverters would be installed include Twomile Creek, South Twomile Creek, Floras Creek, Elk River, Crystal Creek, and Sixes River (Love pers. comm). In consultation with USFWS, BPA agreed to install spiral bird diverters in the Elk Creek floodplain. The impact related to avian collisions would be low to moderate with installation of spiral bird diverters and because no avian collisions are known to have occurred along the existing transmission line.

Impacts on wildlife from operations and maintenance activities would be similar to the impacts described above, but the updated transmission line and access roads would likely require less maintenance work. Removal of danger trees and vegetation during vegetation management activities would modify wildlife habitat although removal of weed species would improve wildlife habitat. Because impacts from operations and maintenance activities would be temporary and localized, impacts would be low.

Special-Status Species

Eagles

USFWS National Guidelines state that active bald eagle nests should be buffered at least 660 feet from the line of sight to the nest, or 330 feet in areas where topography or vegetation obstruct views of work areas from the nest (U.S. Fish and Wildlife Service 2007). These guidelines also state that blasting should not be conducted within 0.5 mile of nests during the breeding season (Maurice pers. comm.). Because the closest Rebuild Project work area is 1,600 feet from the nearest known bald eagle nest, the Rebuild Project would not result in direct impacts on eagle nests.

Bald and golden eagles could be indirectly affected by the Rebuild Project. Because the typical eagle foraging territory is several square miles in size, eagles are likely to forage within the study area. It is likely that eagles would cease foraging near Rebuild Project work areas during construction due to increased noise and activity levels. Given the large size of an eagle's foraging territory, the temporary increase in noise and activity levels in work areas are unlikely to result in a measurable decrease in eagle foraging resources. Direct and indirect impacts on eagles would be low because of the distance of work areas from the three known bald eagle nest in the study area, the installation of spiral bird diverters over waterways, and the minimal disturbance to foraging resources.

Threatened and Endangered Species

As required by Section 7 of the federal ESA, BPA ~~is preparing~~prepared a BA assessing the potential effects of the Proposed Action on northern spotted owl and marbled murrelet in order to enter into consultation with USFWS. Potential impacts on marbled murrelet and northern spotted owl are discussed below.

Northern Spotted Owl

During the breeding period, nesting northern spotted owl and their young are generally limited to the immediate vicinity of the nest; therefore, nesting northern spotted owl may be directly affected by Rebuild Project activities within 0.25 mile of active nests. USFWS provides guidance on construction-related activities that have the potential to disrupt nesting if conducted near potential nesting habitat during the nesting period. Rebuild Project activities proposed near suitable northern spotted owl habitat during the breeding period include removal and replacement of three structures, stringing of conductor using a helicopter at these structures, and access road work.

Danger tree removal would not occur within suitable northern spotted owl habitat; therefore, downgrading of nesting, roosting, foraging, and dispersal habitats would not occur. Prey species should not be affected because modification to standing forest structure and downed woody material that support prey habitat would not occur.

Effects from increased noise and activity levels during Rebuild Project activities would be temporary. Noise and activity would be episodic because activities are expected to occur on different days, with work periods interspersed with some days of no construction activity. Because suitable northern spotted owl habitat within the study area is adjacent to Highway 101 and a public use area, it is likely that northern spotted owl in these areas are habituated to vehicles and human presence. Construction-related noise would not represent a substantial increase over ambient noise conditions.

Disturbance and disruption during the northern spotted owl breeding period would be minimized by the implementation of mitigation measures. Work would not be conducted near suitable habitat during the critical breeding period. The implementation of daily dawn/dusk timing restrictions during the late breeding period would further reduce impacts on nesting spotted owl. Helicopter use would not occur near suitable habitat until after September 15.

As a result of the Rebuild Project, northern spotted owl would not be expected to permanently abandon the study area and no reduction in the abundance or distribution of northern spotted owl

is expected. No nesting, roosting, foraging, or dispersal habitat would be modified. Therefore, with implementation of mitigation measures, as agreed upon with USFWS, the Rebuild Project impacts on northern spotted owl would be low. There would be no impacts on northern spotted owl designated critical habitat, because the designated critical habitat is not present in the study area.

Marbled Murrelet

During the breeding period, nesting marbled murrelet chicks are limited to the nest and adults visit nests on a daily basis; therefore, nesting marbled murrelet could be directly affected by Rebuild Project activities within 0.25 mile of active nests. USFWS provides guidance on construction-related activities that have the potential to disrupt nesting if conducted near nesting habitat during the nesting period. Rebuild Project activities proposed near suitable marbled murrelet habitat during the breeding period include removal and replacement of 14 structures, installation of three new structures, stringing of conductor using a helicopter, access road work, and danger tree removal.

During nesting, noise above ambient sound levels can cause adult marbled murrelets to startle and abandon their nests. Marbled murrelets are most sensitive to noise at dawn and dusk and during the early breeding season, April 1 through August 5. They are thought to be less sensitive to noise during the late breeding season, August 6 through September 15. During the late breeding season, noise may be above ambient levels and persist for several hours to several days in areas adjacent to nest sites.

Effects from increased noise and activity levels during Rebuild Project activities would be temporary. Noise and activity would be episodic, because activities are expected to occur on different days, with work periods interspersed with some days of no construction activity. Because some suitable marbled murrelet habitat within the study area is adjacent to U.S. 101 and a public-use area, it is likely that marbled murrelet in these areas are habituated to vehicles and human presence.

Disturbance and disruption during the marbled murrelet breeding period would be minimized by the implementation of mitigation measures. Work would not be conducted near suitable habitat during the critical breeding period. The implementation of daily dawn/dusk timing restrictions during the late breeding period would further reduce impacts on nesting marbled murrelet. Helicopter use would not occur near suitable habitat until after September 15.

Danger tree removal within 0.25 mile of suitable marbled murrelet habitat would have the potential to affect marbled murrelet and nesting habitat. Removal of five hemlock, two cedar, and Douglas-fir trees within or near suitable habitat would not affect nesting habitat because these trees do not have nesting platforms. Nesting marbled murrelet and habitat would not be affected by danger tree removal, because mitigation measures would be implemented to preclude removal of these danger trees until after September 15 to avoid the nesting period.

As a result of the Rebuild Project, marbled murrelet are not expected to permanently abandon the study area and no reduction in the abundance or distribution of marbled murrelet is expected. Nesting habitat would not be modified. Therefore, with implementation of mitigation measures, as agreed upon with USFWS, the Rebuild Project impacts on marbled murrelet would be low.

There would be no impacts on marbled murrelet designated critical habitat, because it does not occur within the study area.

3.10.3. Mitigation—Proposed Action

If the Proposed Action is implemented, BPA would implement the following mitigation measures to avoid or minimize impacts on wildlife.

- Explain wildlife-related mitigation measures and permit conditions to construction contractors and inspectors during a preconstruction meeting covering environmental requirements.
- Delineate construction limits within 200 feet of streams, other waterbodies, wetlands, and floodplains; manage sediment as specified in the SWPP Plan, with ~~a sediment fence, straw wattles, or a similarly~~an approved method that meets the *Stormwater Management Manual for Western Washington* (Washington State Department of Ecology 2005) erosion and stormwater control best management practices, to eliminate sediment discharge into waterways and wetlands, minimize the size of construction disturbance areas, and minimize removal of vegetation, to the greatest extent possible.
- Restrict construction activities to the area needed to work effectively, in order to limit disturbance of native plant communities to the minimum amount necessary to prevent spread of weed species.
- Install vehicle and equipment wash stations ~~(water and compressed air) in each work area~~ to minimize spread of weeds and Port-Orford-cedar root disease, preferably near where pavement ends and gravel or dirt access roads begin, if feasible[1]; ~~mandate~~ use ~~of~~ wash stations ~~for~~ to clean vehicles and equipment prior to entering and leaving each work area; and prohibit discharge of vehicle wash water into any stream, waterbody, or wetland.
- Reseed disturbed areas after construction and regrading are complete, at the appropriate time period for germination, with a native seed mix, a seed mix recommended by ODFW, or a seed mix identified in the *Stormwater Management Manual for Western Washington* (Washington State Department of Ecology 2005), or as agreed upon with landowners for use on their property.
- Monitor seed germination of seeded areas with at least three field visits per year until site stabilization (defined as at least 70% cover by native or acceptable nonnative species) is achieved; if vegetative cover is inadequate, implement contingency measures and reseed to ensure adequate revegetation of disturbed soils.
- Install ~~avian~~ spiral bird diverters on conductors in six areas with wide ~~spanning~~ spans ~~areas~~ that are identified as potential bird flyways, including wide floodplains and some waterways that intersect the transmission line corridor, to decrease the potential for avian collisions.
- Implement timing restrictions on construction work and danger tree removal conducted near and within suitable marbled murrelet and northern spotted owl habitat, as agreed upon in consultation with USFWS.

---

[1] Finding suitable locations for wash stations in all work areas is not possible due to the presence of wetlands, waterways and steep topography. If wash stations could not be situated along each access road leading to work areas, equipment would be washed prior to entering work areas and as soon as possible after leaving work areas, at the nearest wash station location.

- Conduct removal of danger trees after August 15, except in or near suitable ~~located 0.25 mile beyond~~ marbled murrelet and northern spotted owl habitat, where tree removal would not be conducted until after September 15 ~~areas after August 15~~.

3.10.4. Unavoidable Impacts Remaining After Mitigation—Proposed Action

Implementation of the mitigation measures described above would reduce impacts on wildlife, but would not completely eliminate them. Noise, activity, and vegetation removal during construction would result in a temporary loss of wildlife habitat in and near construction areas. A minimal amount of permanent habitat loss would occur from the installation of 19 structures in areas where structures currently do not exist and from construction of less than 1 mile of new access roads. This minimal loss of habitat is not expected to adversely affect the viability or survival of species at the population level. Therefore, unavoidable impacts on wildlife from loss of habitat after mitigation would be low to moderate. The potential for avian collisions would be minimized by the placement of spiral bird diverters on conductor that spans six waterways, a low to moderate impact. Impacts on special-status species (eagles, northern spotted owl, and marbled murrelet) would be low after mitigation.

3.10.5. Cumulative Impacts—Proposed Action

Wildlife habitat in the project vicinity has been cumulatively modified by past, present, and future activities including forestry, farming, ranching, hunting, weed control activities, and utility and road construction and maintenance. Past and current BPA activities include the BPA Fairview-Rogue Access Roads Improvement Project, vegetation management activities, and operations and maintenance activities. The Proposed Action would contribute, although in only a minor way, to these cumulative impacts on wildlife and wildlife habitat, through temporary disturbance during construction and permanent removal of extremely small areas of wildlife habitat.

3.10.6. Environmental Consequences—No Action Alternative

Under the No Action Alternative, the existing transmission line would not be rebuilt, and, therefore, the impacts related to the construction of the Rebuild Project would not occur. Operation and maintenance activities would continue and be similar to existing conditions, as described in Section 2.1.3. Maintenance activities would likely increase as existing structures deteriorate and more structure repair and replacement could be required. Maintenance of access roads would continue and access road work proposed under the Rebuild Project would likely need to take place as an operations and maintenance activity. The removal of danger trees and other tall-growing vegetation would likely need to take place and would continue to modify wildlife habitat. Because impacts of the No Action Alternative on wildlife would be temporary and localized, impacts would be low to moderate.

This page left intentionally blank.

3.11. CULTURAL RESOURCES

3.11.1. Affected Environment

The study area for ***cultural resources*** consists of the right-of-way, danger tree removal area adjacent to the right-of-way, and the access roads where work would be conducted. Cultural resources include things and places that demonstrate evidence of human occupation or activity related to American history, architecture, archaeology, engineering, and culture. Historic properties, a subset of cultural resources, consist of any district, site, building, structure, artifact, ruin, object, work of art, or natural feature important in human history that meets defined eligibility criteria for the National Register of Historic Places (NRHP). Historic properties include "prehistoric" resources that predate European settlement. ***Traditional Cultural Properties (TCPs)*** are properties identified by an existing community as being important to that community's historical and current identity and traditional knowledge and culture.

Several Native American tribes occupied portions of the landscape in and around the study area prior to the arrival of Europeans. The area in the vicinity of the northern portion of the project area was home to the Lower Coquille Milk of the Coosa language families. The remaining portion of the study area was home to three small bands of Athapaskan speakers: Kalama, Yukichetunne, and Chemetunne Tututni. The Coosan speakers lived in villages that were close to their fishing and hunting resources. The Athapaskan speakers lived in winter villages and moved seasonally to different areas to procure available resources.

The Oregon South Coast was visited by various European sailing missions in search of the Northwest Passage during the sixteenth century. Euro-American activity in and around the study area during the seventeenth century was dominated by fur trading. Fur trading posts and small settlements in the area led to conflicts with the region's Native American population; conflicts lasted until about 1857. Two years later, Oregon became a state and settlement of the South Coast increased, including settlement of Port Orford (1851) and Bandon (1870s). The primary industries during this period and continuing into the twentieth century were mining and logging, with extensive mining occurring along the Rogue River, Sixes River, and the South Fork of the Coquille River.

The Bandon-Rogue transmission line and associated substations are part of the history of the development of the area. The transmission line was built during the post-war expansion of the BPA transmission system to provide reliable electricity to the South Coast. The Bandon–Port Orford transmission line was designed in 1950 and the Port Orford–Gold Beach transmission line was designed in 1950 but mostly built in 1952. The Bandon-Rogue transmission line was created when the 24 mile long Bandon–Port Orford transmission line and the northern 22 miles of the Port Orford–Gold Beach transmission line were combined. Ongoing maintenance of the transmission line has occurred since its construction.

Consistent with the National Historic Preservation Act (NHPA), BPA identified cultural resources in the study area and ~~is working to evaluate~~ evaluated them for eligibility in the NRHP. A literature review of known information and known cultural sites was conducted (McCormick et al. 2010a). BPA consulted with the State Historic Preservation Officer (SHPO) and tribes with an interest in this area, requesting information on cultural resources within the study area as

required by the NHPA. During the consultation process, affected tribes did not identify any TCPs in the study area.

Cultural resource surveys were conducted in the study area in spring through fall 2010. These surveys verified the existence of one previously recorded prehistoric site and identified three new prehistoric sites (McCormick et al. 2010b). After obtaining landowner permission and applicable state permits, three of these sites ~~will be~~were evaluated in the winter of 2011 to determine if they are eligible for the NRHP. ~~If~~ Because landowner permission ~~cannot~~ could not be obtained for one of the sites, ~~sites~~ it will be ~~considered~~ treated as ~~if~~ eligible for the NRHP, without testing and evaluation.

A survey of historical transmission line facilities within the study area was also conducted (Finley 2010).

The Bandon-Rogue and Fairview-Rogue transmission lines and the Bandon, Port Orford, and Rogue substations were identified as possible candidates for listing in the NRHP as part of the BPA Transmission System. The BPA Transmission System is being evaluated for its historic significance during two key periods of its development, the Master Grid Development (1938–1945), and the System Expansion (1946–1974).

As a part of the BPA Transmission System evaluation, BPA, in consultation with SHPO, applied the NRHP criteria of evaluation to determine which properties are eligible. The built resources, such as transmission lines, substations, and control houses, will be submitted as part of a Multiple Property Submission, which includes a Multiple Property Documentation Form detailing BPA's historic context and individual Registration Forms for each property type. Resources will be nominated under criterion "A" for their association with design, construction, and operation of the BPA Transmission System in the Pacific Northwest. Some properties may gain additional significance under criterion "C," for architectural design or their association with key technologies in the area of electrical transmission (Kramer 2009, 2010).

Four of the five historic-era properties were determined to meet eligibility criteria for the NRHP. These include the Bandon Substation, the Bandon-Rogue transmission line, the Port Orford Substation, and the Rogue Substation. Although the Bandon-Rogue transmission line has been modified, it is mostly intact and very much like the original transmission line. Its original form and function have been preserved and it retains sufficient ***integrity*** to effectively retain its association with the larger BPA transmission system. The Fairview-Rogue transmission line was evaluated but does not meet eligibility criteria, so is not considered a historic property eligible for the NRHP (Finley 2010). BPA consulted with the SHPO and tribes on this determination of eligibility and received concurrence from the SHPO on December 29, 2010. Tribes did not submit any comments.

3.11.2. Environmental Consequences—Proposed Action

Because the Proposed Action would not modify the Bandon, Port Orford, or Rogue substations, it would not adversely affect them. Rebuilding the Bandon-Rogue transmission line would not adversely affect the characteristics that make the transmission line eligible for listing in the NRHP. The replacement structures would be the same as the existing structures with the exception that six of the two-pole structures would become three-pole structures and one three-pole structure would become a two-pole structure. The transmission line would also retain its

current alignment. The main difference between the existing and proposed transmission line is that the majority of the heights would change (Appendix A). Because the material type and pole design of the support structures would remain largely the same and because the alignment and function would be unchanged, the transmission line's visual uniformity would remain and the integrity of the transmission line would remain intact. BPA has determined that the Proposed Action would not adversely affect the transmission line's eligibility for the NRHP, and the SHPO concurred with this determination.

BPA ~~will evaluate~~evaluated three of the four prehistoric sites, after obtaining landowner permission and the applicable state permit and ~~determine~~ determined whether the Proposed Action could adversely affect these sites. ~~If~~ Because these three sites are eligible for the NRHP, BPA ~~would workclosely~~ is consulting with the SHPO and affected tribes to avoid or minimize impacts on~~to~~ the sites. ~~If~~ Because landowner permission ~~cannot~~ could not be obtained to evaluate ~~a~~ one prehistoric site, it will be ~~considered as if~~ treated as eligible for the NRHP, without testing and evaluation. ~~If~~ Because impacts ~~to~~on a portion of these sites are unavoidable as a result of work on existing access roads and removal and replacement of four structures, the integrity of these sites could be affected and associated information could be lost. Impacts on resources protected by NHPA are expected to be low to moderate after mitigation, depending on the level and amount of impacts.

Ground disturbance associated with rebuilding the transmission line and completing access road work could damage or destroy unknown cultural resources. Unknown cultural resources could be disturbed through accidental discovery. The Proposed Action could result in adverse impacts on these resources, depending on the extent of the resource sites and their proximity to structure sites and access roads. In the event that a previously undocumented resource is disturbed from project construction, the characteristics of the site could be adversely affected such that cultural information could be lost or damaged. Increased access to lands within the study area during project construction also could result in vandalism and looting of cultural resource sites. Impacts on resources would be low to moderate after mitigation, depending on the level of disturbance, the amount of disturbance, and the eligibility of the resource.

Some impacts on cultural resources could occur during the continuing operation and maintenance of the proposed transmission line. The 19 additional structures and new access roads have been sited to avoid areas that are likely to contain cultural resources, so maintenance of these structures or access roads would not affect known resources. If any maintenance activities needed to occur outside of the study area, additional analysis would be required to avoid potential adverse impacts on cultural resources. Impacts would be low to moderate, depending on the level and amount of disturbance.

3.11.3. Mitigation—Proposed Action

If the Proposed Action is implemented, the following mitigation measures would be implemented to avoid and minimize impacts on cultural resources.

- Limit access road work within cultural resource sites to the existing roadbed, and confine the work to applying new material on top of existing material, where possible.
- Implement an Inadvertent Discovery Plan that details crew member responsibilities for reporting in the event of a discovery during construction; require work to stop immediately

and notification of local law enforcement officials (as required), appropriate BPA personnel, the SHPO, and affected tribes if cultural resources, either archaeological or historical materials, or human remains are discovered during construction activities.

- Ensure that cultural resource monitors are present during construction work near known prehistoric sites.
- Prepare a mitigation plan for unavoidable adverse impacts on resources eligible for listing under the NRHP in consultation with the SHPO and affected tribes.
- Explain cultural resource-related mitigation measures and permit conditions to construction contractors and inspectors during a preconstruction meeting covering environmental requirements.

3.11.4. Unavoidable Impacts Remaining After Mitigation—Proposed Action

~~In the event that resources~~ Three prehistoric sites eligible for listing under the NRHP ~~are~~ would be adversely affected by the Rebuild Project. Another prehistoric site that would be treated as eligible also would be adversely affected by the Rebuild Project. BPA would implement appropriate measures to mitigate for these impacts, in consultation with the SHPO and tribes, as described above. In addition, disturbance of previously undocumented cultural resources could occur through inadvertent disturbance or destruction during project construction. Even with mitigation, the integrity of these sites could be affected and sensitive cultural information in an intact setting could be lost. Impacts would be low to moderate, depending on the level and amount of disturbance.

3.11.5. Cumulative Impacts—Proposed Action

Cultural resources in the project vicinity have likely been cumulatively affected because of past, present, and current development and activities. Most impacts likely have occurred as a result of inadvertent disturbance or destruction made during ground-disturbing activities such as road work, farming, site development, and forestry operations. The extent of looting of and vandalism to cultural resources in the project vicinity is not known. These cumulative impacts include disturbance of cultural sites, reduction of the cultural integrity of certain sites, and removal of cultural artifacts.

Because the Rebuild Project would likely impact prehistoric sites, it would contribute incrementally to these cumulative impacts. If the Rebuild Project also adversely affected previously undiscovered cultural resources or artifacts, it would contribute incrementally to the adverse cumulative impact to cultural resources in the area.

3.11.6. Environmental Consequences—No Action Alternative

Under the No Action Alternative, the existing transmission line would not be rebuilt; therefore, the impacts related to the construction of the Rebuild Project would not occur. Operation and maintenance activities would continue and would be similar to existing conditions, as described in Section 2.1.3. Maintenance activities would likely increase as existing structures deteriorate, and more structure repair and replacement could be required. Maintenance of access roads would be needed and road work proposed under the Rebuild Project would likely need to take place as an operations and maintenance activity. The maintenance activities would result in low

to moderate impacts on cultural resources, depending on the level and amount of disturbance, similar to the impacts described above.

This page left intentionally blank.

3.12. SOCIOECONOMICS AND PUBLIC SERVICES

3.12.1. Affected Environment

The study area for socioeconomics and public services consists of Coos and Curry counties, the counties in which the Proposed Action would occur.

Population and Housing

In 2009, the population of Coos County was estimated at 62,795 and the population of Curry County was estimated at 21,148. Combined, these two counties make up 2.2% of the state's population. The largest city in these two counties, Coos Bay City, is located in Coos County. It had a population of 15,374 in 2000. From 2000 to 2009, the counties grew at an estimated combined rate of less than 0.1% compared with 11.8% for the state as a whole (U.S. Census Bureau 2010).

Employment and Income

The main industries of Coos County are farming, fishing, forestry and wood products, and tourism (Bay Area Chamber of Commerce 2010). The leading employment sectors are government, retail trade, educational and health services, and leisure and hospitality services. In 2009, the Coos County median household income was $37,128, or 74% of Oregon's statewide average. Per capita income was $17,547, or 84% of the statewide average (Oregon Employment Department 2010).

The main industries in Curry County are wood products, tourism, commercial fishing, and fish processing (Oregon Housing and Community Services 2006). The leading employment sectors are government, retail trade, leisure and hospitality services, and educational and health services. In 2009, the Curry County median household income was $36,865, or 74% of the statewide average. Per capita income was $18,138, or 87% of the statewide average (Oregon Employment Department 2010).

Property

Within the study area, private residences are located along some areas of the right-of-way. Some of these homes predate the existence of the transmission line. The highest concentration of homes occurs along Line Miles 15 and 16. (For more information on existing residential uses, see Section 3.2, Land Use, of this EA).

Environmental Justice

All projects involving a federal action (i.e., funding, permit, or land) must comply with Executive Order 12898, Federal Actions to Address Environmental Justice in Minority Populations and Low-Income Populations, signed by President Clinton on February 11, 1994. This Executive Order directs federal agencies to take the appropriate and necessary steps to identify and address disproportionately high and adverse effects of federal projects on the health or environment of minority and ***low-income populations*** to the greatest extent practicable and permitted by law.

Minority Populations

The estimated 2009 Coos County population (62,795) breaks down as follows: 92.5% white, 4.8% Hispanic or Latino origin, 2.6% American Indian, and 3.1% of two or more races (U.S. Census Bureau 2010). In Coos County, American Indian and multiple-race population segments are proportionately larger, but not statistically significant, than those in Oregon as a whole, 1.4% and 2.5% higher, respectively.

The estimated 2009 Curry County population (21,148) breaks down as follows: 93.9% white, 2.3% American Indian, and 2.4% of two or more races (U.S. Census Bureau 2010). American Indians are the only minority race that makes up a slightly larger share of the Curry County population than for Oregon as a whole.

Based on field observations and conversations with local residents no known communities of ***minority populations*** are located near the right-of-way.

Low-Income Populations

The definition of low income is based on the U.S. Department of Health and Human Services poverty guidelines. For 2009, this was defined as $22,050 for a family of four (U.S. Department of Health and Human Services 2010). In 2009, an estimated 17.8% of households in Coos County had income below the poverty level, as compared to 13.5% of the statewide population. In 2009, an estimated 14.8% of households in Curry County had income below the poverty level (U.S. Census Bureau 2010). Information on the income level of residents near the transmission line corridor is not available.

Public Services

Electrical service in the study area is provided by the Coos-Curry Electric Cooperative, Inc., and the City of Bandon. Coos-Curry Electric Cooperative serves members in the rural areas east and south of Coos Bay in Coos County and all of Curry County, except for the town of Langlois and the City of Bandon, where electricity is provided by the City of Bandon.

Public water in the study area is provided by municipal systems and water districts. Municipal solid waste is disposed of at one of three disposal sites: the Beaver Hill Disposal Site located in Coquille, the Joe Ney Construction Debris Landfill located in Charleston, or the Bandon Landfill in Bandon.

Fire protection in the study area is provided by either city fire departments or rural fire protection districts. Some portions of the study area are outside of rural fire protection districts. Fire protection in these areas is provided by the U.S. Forest Service for federal forest lands and the Coos Forest Protective Association for state forest lands and private commercial timberland. Police protection in the study area is provided by the Curry County Sheriff's Department, the Coos County Sheriff's Department, and the Oregon State Police.

Curry County is served by three school districts and Coos County is served by six school districts, all providing education to grades 1 through 12. Students are transported to schools by an extensive system of school bus routes that traverse most county roads.

3.12.2. Environmental Consequences—Proposed Action

Population and Housing

Because construction activities associated with the Proposed Action would occur within a single year, it is not anticipated that the duration of construction work would be long enough to induce any permanent changes to population in the study area. During peak construction, a maximum of 50 workers would work along various segments of the transmission line. The origin of the work force is not known at this time and would depend on where the construction contractor is based. If workers (and possibly some dependents) are from out of the area they would require temporary lodging in the local area during construction. Construction workers might rent parking for RVs or other live-in vehicles. Because increased demand for housing would be temporary, impacts on housing would be low.

Employment and Income

The Proposed Action would temporarily stimulate the local economy through some material purchases in the area, payroll to construction workers, and related indirect or ***multiplier effects***. Multiplier effects occur when money that is spent continues to filter through the local economy, resulting in secondary benefits. For example, money paid to a temporary construction worker is spent at a local grocery store. In turn, sales at the store increase, resulting in increased profits, which in turn are spent elsewhere in the community. Economic benefits of the Proposed Action would occur for a limited time during construction.

The Proposed Action would bring 30 to 50 construction workers to the project area. They would work an estimated 60 hours per week for approximately 8 months. Based on BPA experience with many similar projects, most of the workers are likely to reside outside of Coos and Curry counties. Such workers typically reside temporarily near the construction site with or without their families, using motels or trailer parks for lodging. They would purchase meals, groceries, gasoline and other necessities from local restaurants and stores.

The economic impact analysis for this EA assumes that 40 construction workers would come from outside the study area and likely spend an average of $100 per day within the study area over the 8-month construction period, including $40 per-day for lodging, $50 for meals and groceries, and $10 for fuel. This spending would generate a total of $630,000 in direct spending within the study area, and would generate an estimated $216,000 in income within the study area by contributing to the incomes of the employees and owners of the businesses that serve the construction workers. A portion of the money spent by the workers would be respent in the study area, thus increasing total regional output and labor income by $885,000 and $298,000, respectively. (Minnesota IMPLAN Group 2007). These impacts are very small relative to the study area's roughly $1.5 billion in total annual income (Oregon Employment Department 2010). Therefore, the impacts of these additional expenditures on overall area economic activity, while beneficial, would be low.

After construction, the new transmission line would not affect economic activity in the area; however, the rebuilt transmission line may indirectly contribute to regional stability and economic growth by reliably meeting power demands. This would be a long-term positive impact.

Some minimal disturbance of and possible temporary interference with agricultural and forestry operations along the right-of-way could occur. For example, construction related to replacing structures and access road work adjacent to cranberry bogs could result in conflicts with agricultural operations. Impacts on forestry operations could result from the use of roads by construction-related vehicles and equipment, which could result in some delays to vehicles and trucks used in forestry operations. Because the disruptions would be temporary, the economic impact would be low.

Property

Some temporary impacts on property value and salability could occur on an individual basis during construction. This would occur as a result of construction-related disturbance from construction noise and increased activity. Because construction-related disturbance would be temporary and would not likely last in any one location for more than a few days, this impact would be low. The Proposed Action would have no impact on property taxes, because the footprint of the transmission line would not change.

Environmental Justice Populations

Although minority and low-income populations do occur in the study area in a very slightly larger proportion than in the state as a whole, no known minority communities live near the right-of-way. The impacts of the Proposed Action would relate to construction and would be temporary. Furthermore, they would occur mostly within the existing right-of-way and existing roads and would be borne equally along the right-of-way. Therefore, potential impacts of the Proposed Action are not expected to disproportionately affect environmental justice populations.

Public Services

The Proposed Action could impact public services during construction. Rebuilding of the transmission line would be done in sections to avoid power outages during construction. Construction would require the use of water for dust suppression and weed management, and the disposal of construction materials. Water for trucks would be provided by local sources. Water use would not be substantial enough to affect local water supply. Construction waste would be recycled or taken to a local waste disposal site with adequate capacity. Construction equipment traffic would result in minimal localized delays of only a few minutes but would not disrupt the ability of emergency service personnel to operate. Because most of the construction would occur from the late spring through early fall, it would only overlap with the end and beginning of the school year. Because construction-related impacts on public services would be temporary and would result in minimal localized effects, they would be considered low.

3.12.3. Mitigation—Proposed Action

If the Proposed Action is implemented, BPA would implement the following mitigation measures to avoid, minimize, or compensate for impacts. See also Section 3.2, Land Use, of this EA for additional mitigation measures that relate to public services.

- ~~Employ~~Require the contractor to employ a lands liaison, who will be available to provide information, answer questions, and address concerns during project construction.

- Develop and distribute a schedule of construction activities to potentially affected landowners along the transmission line corridor to inform residents when they may be affected by construction activities; advertise construction schedule in local newspapers and post in public places customarily used for public notices, such as libraries, post offices, and local government buildings.
- Develop and distribute a schedule of construction activities to potentially affected farm and timber operators along the transmission line corridor to allow planting, harvesting, and operation and maintenance activities to be scheduled around construction.
- Coordinate the routing and scheduling of construction traffic with the Oregon Department of Transportation and Coos County and Curry County road staff to minimize interruptions to local traffic.

3.12.4. Unavoidable Impacts Remaining After Mitigation—Proposed Action

Implementation of the mitigation measures described above would help to minimize some of the economic impacts associated with construction-related disturbance. However, impacts associated with potential conflicts with agricultural operations, disruption of travel along some construction access roads, and temporary property impacts would still remain after mitigation. There could be temporary impacts on housing availability during construction. These temporary impacts would be low.

3.12.5. Cumulative Impacts—Proposed Action

Construction projects in the study area, including the Fairview-Rogue Transmission Line Access Road Improvement Project, have resulted in minor contributions to the local economy within the study area. In addition, these projects have also resulted in some construction-related impacts that could temporarily affect population and housing, employment and income, property, and environmental justice populations. Because the impacts of the Proposed Action would be temporary, the Proposed Action would not noticeably contribute to a cumulative impact on these resources.

3.12.6. Environmental Consequences—No Action Alternative

Under the No Action Alternative, the existing transmission line would not be rebuilt; therefore, the impacts related to the construction of the Rebuild Project would not occur. Operation and maintenance activities would continue and would be similar to existing conditions, as described in Section 2.1.3. Maintenance activities would likely increase as existing structures deteriorate, and more structure repair and replacement could be required. Maintenance of access roads would be needed and access road work proposed under the Rebuild Project would likely need to take place as an operations and maintenance activity. The maintenance activities would also result in some low impacts on socioeconomics and public facilities, related to temporary construction-related disturbances, similar to the impacts described above.

This page left intentionally blank.

3.13. NOISE

Noise is generally considered as sound that is loud, disruptive, unexpected, or otherwise undesirable. Environmental noise is commonly quantified in terms of ***A-weighted decibels (dBA)***, an overall frequency-weighted sound level that approximates the frequency response of the human ear. Table 3.13-1 contains examples of common activities and their associated noise levels in dBA.

Table 3.13-1. Common Activities and Associated Noise Levels

Activity	Noise Level (dBA)
Bedroom at night	25
Refrigerator	40
Moderate rainfall on vegetation	50
Normal conversation indoors	60
Gas lawnmower 100 feet away	70
Truck 10 feet away	80
Loud live band music	110

The ability to perceive a new noise source intruding onto background conditions depends on the nature of the intruding sound and the background sound. For situations where the nature of the new sound is similar to the background sound (e.g., new traffic noise added to background traffic noise) a noise of 3 dBA is just noticeable, a change of 5 dBA is clearly noticeable, and a change of 10 dBA is perceived as doubling or halving sound level. For situations where the nature of the new intruding sound is different from background sound (e.g., construction noise in an otherwise quiet setting), the new sound (including sporadic “clanks” from construction equipment) can be perceived even if it only raises the overall noise level by less than 1 dBA.

There are no federal regulations applicable to noise generated by the Proposed Action. State noise regulations include ***ambient noise*** limits for vehicles operated near noise-sensitive properties and for permanent stationary industrial facilities. Noise from vehicles should not to exceed 60 dBA during daytime hours (7:00 a.m. to 10:00 p.m.) (OAR 340-035-030). Noise levels from industrial noise sources (permanent stationary noise sources) should not exceed 50 dBA during the day or 45 dBA during the night near quiet areas (OAR 340-035-035). BPA seeks to comply with state noise regulations where practicable. Construction noise is exempt from state regulations and there are no noise ordinances for Coos or Curry counties.

3.13.1. Affected Environment

The study area for the noise analysis includes the area within 1,000 feet of the right-of-way and 500 feet of project roadways (i.e., any road that could be subject to increases in traffic volume from construction vehicles and worker trips). Noise-sensitive land uses in the study area include residences, recreation areas, and other areas where noise can affect how outdoor areas are used or enjoyed.

Background noise levels vary along the length of the right-of-way. Most of the right-of-way is located in undeveloped, rural areas where noise levels generally are very low. The predominant sources of noise in the study area include local traffic and equipment used for construction and maintenance. Background noise levels found in forested rural environments without significant transportation or industrial noise are generally 35 to 45 dBA depending on wind conditions. Rural areas near roads and residential areas likely experience higher background noise levels from increased human activity, in the range of 40 to 50 dBA. Other sources of noise in the study area include recreational use, agricultural and silvicultural use, and maintenance vehicles along the right-of-way and along other utility corridors.

Noise from existing transmission lines contributes to the noise setting, but is overshadowed by other noise sources in existing developed areas. Sources of audible noise associated with transmission lines include construction and maintenance equipment and transmission line corona. Corona-generated noise on the wires (conductors), characterized as a hissing, crackling sound, is generally only of concern for transmission lines operating at voltages of 345 kV or greater, during wet weather (e.g., rain, snow, heavy fog). Generally, audible noise from 115-kV lines, such as the Bandon-Rogue transmission line, is so low as to be unnoticeable (due to the low amount of corona activity generated at this voltage level) and is usually well below other ambient noise levels in the area. Historically, public complaints/inquiries of transmission line audible noise at this voltage level are extremely rare.

3.13.2. Environmental Consequences—Proposed Action

The Proposed Action could result in direct noise impacts in locations where increased noise affects noise-sensitive receptors. This could occur from construction-related activities associated with rebuilding the transmission line, conducting access road work, removing danger trees, and using area roads for construction and operation and maintenance activities. Noise impacts associated with the transmission line itself are discussed further below.

Construction activities would result in temporary, intermittent, and transitory noise as construction progresses along the right-of-way. Use of conventional equipment during construction is estimated to produce a maximum noise level of 90 dBA at 50 feet. For example, augur drill rigs typically produce a sound level of 85 dBA at 50 feet (Thalheimer 2000). Estimated construction noise levels calculated based on an estimated distance from the noise producing activity and the noise receiver are shown in Table 3.13-2. Noise from construction vehicles and increased work trips would temporarily contribute to existing traffic noise on local roads and on U.S. 101, but is not predicted to result in a significant increase in average traffic noise levels.

Construction noise would also include helicopter use for installing the conductor. Use of helicopters would be temporary and intermittent; it would generally take less than 10 minutes to string the conductor at each structure. It is estimated that a helicopter would not be used in any given line mile for more than 3 hours.

The right-of-way is located far from population centers and borders mostly undeveloped land. Noise impacts during construction would be limited to a few areas where houses are near the right-of-way. The duration of construction activities in any given location is expected to be relatively short (approximately 1 to 2 days). Construction would be limited to daylight hours

(7:00 a.m. to 6:00 p.m.) Noise-sensitive properties within 800 feet of construction zones could be exposed to noise levels of 60 dBA or higher, as shown in Table 3.13-2, and some residents could be exposed to higher noise levels from helicopter use. Although construction noise would result in a temporary increase in ambient noise for some sensitive receptors, the impact would be considered low to moderate, depending on the proximity of sensitive noise receptors to the noise disturbance, because the noise increases would be temporary.

Table 3.13-2. Construction Noise

Distance Between Source and Receiver (feet)	Calculated Sound Level (dBA)*
50	90
100	82
200	74
300	70
400	67
500	64
600	62
800	59
1,000	56
1,400	52
1,800	49
2,500	46

Source: Federal Transit Authority 2006.

* This calculation does not include the effects, if any, of local shielding from walls, topography or other barriers which may reduce sound levels further.

The rebuilt transmission line would continue to produce corona generated audible noise. Because the rebuilt transmission line would continue to operate at 115 kV, corona noise would continue to be so low as to be unnoticeable. Audible noise levels were calculated for various sections of the existing and rebuilt transmission line during wet conditions, when corona noise would be greatest (Table 3.13-3). The data illustrate that the Proposed Action would not significantly change the audible environment near the right-of-way. Noise levels may slightly exceed nighttime state noise standards at the western right-of-way edge under wet conditions. Noise levels would likely decrease to below the 45-dBA nighttime threshold at nearby residences, a low impact.

Table 3.13-3. Right-of-Way Audible Noise* (dBA, wet conditions)

Right-of-Way Section Description		Eastern Right-of-Way Edge	Maximum on Right-of-Way	Western Right-of-Way Edge
Right-of-way section: 212.5-foot right-of-way with two lines: Bandon-Rogue No.1 (115 kV), Fairview-Rogue No.1 (230 kV)	Before Action	38.6	47.0	46.8
	After Action	38.5	47.0	46.8

* Values developed from BPA modeling programs

3.13.3. Mitigation—Proposed Action

If the Proposed Action is implemented, BPA would implement the following mitigation measures to avoid or minimize noise impacts.

- ~~Employ~~ Require contractor to employ a lands liaison, who will be available to provide information, answer questions, and address concerns during project construction.
- Schedule all construction work during daylight hours to avoid noise and the use of nighttime illumination of work areas.
- Locate construction equipment as far away from noise-sensitive uses as possible.
- Require sound control devices on all construction equipment powered by gasoline or diesel engines that are at least as effective as those originally provided by the manufacturer.
- Operate and maintain all construction equipment to minimize noise generation.

3.13.4. Unavoidable Impacts Remaining After Mitigation—Proposed Action

During periods of construction and maintenance, noise from construction vehicles would result in an increase over existing ambient noise levels after implementation of mitigation. Although construction noise would result in a temporary increase in ambient noise for some sensitive receptors, the impact would be considered low to moderate, depending on the proximity of sensitive noise receptors to the noise disturbance, because the noise increases would be temporary and localized. Because the rebuilt transmission line would continue to operate at 115 kV, corona noise would continue to be so low as to be unnoticeable.

3.13.5. Cumulative Impacts—Proposed Action

Noise levels in the project vicinity are cumulatively affected by the existing transmission lines, existing traffic, recreational activities, existing residential uses and any residential construction in the area, agricultural and silvicultural activities, and any infrastructure maintenance projects carried out by local, state, and federal governments. Depending on the timing and proximity of these other activities, the Proposed Action in combination with any nearby and concurrent activities could result in cumulatively increased noise levels in the short term during project construction. However, because construction noise impacts would be temporary, they would not contribute to long-term cumulative noise impacts in the project vicinity. Because noise levels from operation of the rebuilt transmission line would be comparable to those of the existing transmission line, they would not contribute to cumulative noise impacts in the project vicinity.

3.13.6. Environmental Consequences—No Action Alternative

Under the No Action Alternative, the existing transmission line would not be rebuilt; therefore, impacts related to construction of the Rebuild Project would not occur. Operation and maintenance activities would continue and would be similar to existing conditions, as described in Section 2.1.3. Maintenance activities would likely increase as existing structures deteriorate, and more structure repair and replacement could be required. Maintenance of access roads would be needed and road work proposed under the Rebuild Project would likely need to take place as an operations and maintenance activity. Maintenance activities would result in low to moderate impacts on noise, similar to the impacts described above. The existing transmission line would continue to operate as a 115-kV line and would generate low levels of corona noise.

This page left intentionally blank.

3.14. PUBLIC HEALTH AND SAFETY

3.14.1. Affected Environment

The study area for public health and safety includes the existing right-of-way, danger tree removal area adjacent to the right-of-way, and project access roads. This section addresses public health and safety concerns such as electrical shocks, fires, the effects of electric and magnetic fields related to transmission facilities and safety rules related to construction activities.

All electrical wires, from transmission lines to household wiring, produce ***electric and magnetic fields (EMF)***. Current (the flow of electric charge in a wire) produces the magnetic field. Voltage (the force that drives the current) is the source of the electric field. Throughout a home, the electric field strength from wiring and appliances is typically less than 0.01 kV per meter (kV/m). However, fields of 0.1 kV/m and higher can be found very close to electrical appliances.

There are no nationally recognized regulatory standards/limits for electric fields from transmission lines except those inferred from the NESC 5-milliampere criterion for maximum allowable steady-state current in vehicles due to electrostatic effects. For siting transmission lines under its jurisdiction, the State of Oregon, through the Oregon Facility Siting Council, requires that a proposed transmission line be designed and operated so that its electric fields do not exceed 9 kV/m at 1 meter above the ground surface in areas that are accessible to the public (OAR 345-024-0090). BPA designs new transmission lines to meet its own electric-field guideline of 9-kV/m maximum on the right-of-way and 2.5-kV/m maximum at the edge of the right-of-way.

All BPA lines are designed and constructed in accordance with the NESC, which specifies the minimum allowable distance between the conductors and the ground surface or other objects. These requirements determine the edge of the right-of-way and the minimum height of the conductors and the closest point that houses, other buildings, and vehicles are allowed to the transmission line. The strength of the electric field from transmission lines depends on the design of the transmission line and on the distance the electric field is measured from the transmission line. Electric field strength decreases rapidly with distance.

Electric fields from high-voltage transmission lines can cause nuisance shocks when a grounded person touches an ungrounded object under a transmission line or when an ungrounded person touches a grounded object. BPA transmission lines are designed so that the electric field would be below levels where primary shocks could occur from even the largest (ungrounded) vehicles expected under the line.

Average magnetic field strength in most homes (away from electrical appliances and home wiring, etc.) is typically less than 2 milligauss (mG). Very close to appliances carrying high current, fields of tens or hundreds of milligauss are present. Typical magnetic field strengths for some common electrical appliances found in the home are given in Table 3.14-1. Unlike electric fields, magnetic fields from outside power lines are not reduced in strength by trees and building materials. Transmission lines and distribution lines (the lines feeding a neighborhood or home)

can be a major source of magnetic field exposure throughout a home located close to the line. There are no applicable regulations for the regulation of magnetic fields in Oregon.

Table 3.14-1. Typical Magnetic Field Strengths (1 Foot from Common Appliances)

Appliance	Magnetic Fields (mG)[a]
Coffee maker	1–1.5
Electric range	4–40
Hair dryer	0.1–70
Television	0.4–20
Vacuum cleaner	20–200
Electric blanket[b]	15–100

Source: Miller 1974; Gauger 1985

mG = milligauss

[a] The magnetic field from appliances usually decreases to less than 1 mG at 3 to 5 feet from appliances.

[b] Values are for distance from blanket in normal use (less than 1 foot away).

After decades of research, the issue of whether any long-term health effects are associated with magnetic fields from transmission lines remains inconclusive. Magnetic fields are most in question as possible sources of long-term effects, although studies sometimes lump the two (electric and magnetic) fields together. For the latest information, BPA looks to the determinations of the National Institute of Environmental Health Science. Scientific reviews of the research on EMF health effects have found that there is insufficient evidence to conclude that EMF exposures lead to long-term health effects. However, some uncertainties remain for childhood exposures at levels above 4 milligauss (mG) (National Institute of Environmental Health Sciences 1998, 1999, 2002).

Electromagnetic fields can also interfere with electrical equipment, including radio and television interference. ***Electromagnetic interference (EMI)*** can occur from corona activity or as a result of spark-discharge activity from aging hardware. Conductor corona activity is primarily a function of the operating line voltage. In certain circumstances, this EMI can also affect other types of communication systems and sensitive receivers. As with corona audible noise, corona EMI is generally associated with lines operating at voltages of 345 kV or higher. Spark-discharge EMI associated with aging hardware can occur at any operating voltage; however, BPA is not aware of any instances where the existing transmission line has caused radio and television interference at nearby residences.

3.14.2. Environmental Consequences—Proposed Action

Health and safety risks associated with the construction of the Rebuild Project could include increased risk of electrical shocks or fires from high-voltage equipment and increased risk of fires and injury from the use of heavy equipment and hazardous materials, such as fuels, cranes, helicopters, and other activities associated with working near high-voltage lines. In addition, there are potential safety issues with more traffic on the highways and roads in the study area

during construction. Because standard construction safety procedures would be required and employed, impacts on public health and safety would be low.

The primary parameters that affect the EMF levels produced by a power line are line voltage, current loading, line configuration, and line routing. The Proposed Action would not appreciably change any parameters related to electric fields or magnetic fields. The existing EMF within and at the edge of the right-of-way are compared to those predicted for the rebuilt line in Tables 3.14-2 and 3.14-3.

Although a small increase in electric fields is predicted within the right-of-way, this increase would be negligible (Table 3.14-2). In addition, where structure heights would increase, ground-level electric fields would decrease slightly within the right-of-way. No changes are expected beyond the right-of-way. For these reasons, impacts associated with electric fields would be low.

Table 3.14-2. Right-of-Way Electric Field* (kilovolts per meter) for Existing and Proposed Transmission Line

Right-of-Way Section Description		Eastern Right-of-Way Edge	Maximum on Right-of-Way	Western Right-of-Way Edge
Right-of-way Section: 212.5-foot right-of-way with two lines: Bandon-Rogue No.1 (115 kV), Fairview-Rogue No.1 (230 kV)	Existing Line	0.4	4.1	2.6
	Rebuilt Line Estimate	0.4	4.2	2.6

* Values developed from BPA modeling programs.

Table 3.14-3. Right-of-Way Magnetic Field* (milligauss) for Existing and Proposed Transmission Line

Right-of-Way Section Description		Eastern Right-of-Way Edge		Maximum on Right-of-Way		Western Right-of-Way Edge	
		Annual Average	Annual Peak	Annual Average	Annual Peak	Annual Average	Annual Peak
Right-of-way section: 212.5-foot right-of-way with two lines: Bandon-Rogue No.1 (115 kV), Fairview-Rogue No.1 (230 kV)	Existing Line	2.1	4.3	27.1	54.2	27.1	54.2
	Rebuilt Line Estimate	2.2	4.3	26.9	53.8	26.9	53.7

* Based on annual 2009 line load statistics.

Long-term magnetic field exposure is related to average levels. Actual magnetic fields at any particular time depend on line loading at that time. Loading varies throughout the day and year. The predicted field levels are only indicators of how the Proposed Action may affect the magnetic-field environment. They are not measures of risk or impacts on health.

As indicated in Table 3.14-3, magnetic fields on the right-of-way would stay the same or likely decrease as a result of the Proposed Action. A slight increase in average annual magnetic fields was projected along the eastern edge of the right-of-way. However, this increase is less than the exposure generated by a television (Table 3.14-1) and is considered to be negligible. Therefore, impacts from magnetic fields would be low.

Corona-generated EMI is not expected to change. Because the rebuilt transmission line would continue to operate at 115 kV and because new, properly installed connecting hardware would reduce any risk associated with aging hardware spark-discharge activity, the Proposed Action is expected to either not change or possibly slightly reduce radio and television interference along the right-of-way from EMI. Based on past performance, no EMI complaints are expected. Therefore, there would be no impact or low impacts associated with EMI.

3.14.3. Mitigation—Proposed Action

If the Proposed Action is implemented, BPA would implement the following mitigation measures to reduce or minimize impacts on public health and safety.

- Design, construct, and operate the new transmission line to meet the NESC.
- ~~Employ~~ Require the contractor to employ a lands liaison, who will be available to provide information, answer questions, and address concerns during project construction.
- Prepare a site-specific Safety Plan in compliance with state requirements before starting construction; specify how to manage hazardous materials, such as fuel and any toxic materials found in work sites; include a Fire Prevention and Suppression Plan, and detail how to respond to emergency situations; keep the Safety Plan on site during construction and maintain and update, as needed.
- Require the ~~construction~~ contractor to hold safety meetings with workers at the start of each work week to review potential safety issues and concerns.
- Require monthly meetings, attended by the ~~construction~~ contractor and BPA staff, to discuss safety issues.
- Employ traffic control flaggers and post signs along roads warning of construction activity and merging traffic for temporary interruptions of traffic, where needed.
- Secure the work area at the end of each workday, as much as possible, to protect the general public and to safeguard equipment.
- Install temporary guard structures (wood-pole structures) over local utility lines and county roads, where needed, to ensure continued service and safe passage when the conductor line is replaced, or, if guard structures are not used along some county roadways, employ flaggers to ensure safe passage.
- Ground fences and other metal structures on and near the right-of-way during construction to limit the potential for nuisance shocks.

3.14.4. Unavoidable Impacts Remaining After Mitigation—Proposed Action

Health and safety risks associated with the Rebuild Project could include increased risk of electrical shocks or fires from high-voltage equipment and increased risk of fires and injury from the use of heavy equipment and hazardous materials. These impacts would be low with implementation of the mitigation measures listed above. EMF levels would be similar to the existing line. Because the Proposed Action would retain the existing operating voltage of the transmission line (115 kV), any EMI related to conductor corona or spark-discharge activity would remain very low, similar to existing conditions.

3.14.5. Cumulative Impacts—Proposed Action

The Proposed Action would not cumulatively increase the overall level of EMF exposure along the right-of-way. The rebuilt transmission line would have similar EMF levels to those of the existing line. There are no known plans to construct additional transmission lines in the project vicinity, so cumulative levels of EMF or EMI would not increase above the existing levels.

3.14.6. Environmental Consequences—No Action Alternative

Under the No Action Alternative, the existing transmission line would not be rebuilt; therefore, the safety impacts related to the construction of the Rebuild Project would not occur. Operation and maintenance activities would continue and public health and safety impacts would be similar to existing conditions, as described in Section 2.1.3. The existing line would continue to generate low levels of EMF and EMI.

This page left intentionally blank.

3.15. AIR QUALITY

3.15.1. Affected Environment

The study area for the air quality analysis is defined as the air basin that includes Coos and Curry counties. ODEQ and the U.S. Environmental Protection Agency (EPA) regulate air quality in Coos and Curry counties. EPA has established the national ambient air quality standards (NAAQS) for six criteria air pollutants: ***carbon monoxide (CO)***, ***ozone***, particulate matter, lead, sulfur dioxide, and nitrogen dioxide. ODEQ has adopted the standards set by EPA. For each of the six criteria pollutants, NAAQS is defined as a maximum concentration above which adverse effects on human health may occur.

When air quality in an area exceeds the NAAQS, it is designated a ***nonattainment*** area. No part of the study area is a designated as a nonattainment area for monitored pollutants (Oregon Department of Environmental Quality 2010a). CO is an air pollutant generally associated with transportation sources. The highest ambient CO concentrations often occur near congested roadways and intersections during periods of low temperatures, light winds, and stable atmospheric conditions. Vehicles along U.S. 101 are the primary source of CO in the study area. Because ODEQ does not operate CO monitoring stations in the study area, no data are available on CO concentrations in the study area. Because the traffic volumes on U.S. 101 rarely result in congestion, it is unlikely that CO levels exceed standards.

Ozone is primarily a product of more concentrated motor vehicle traffic during warm, sunny weather. Small amounts of ozone might be produced by the existing transmission line as a result of ***corona*** (the breakdown of air at the surface of conductors). ODEQ does not monitor ozone in the study area (Oregon Department of Environmental Quality 2010c). Ozone concentrations in the study area are likely to be less than the 8-hour average standard of 0.075 parts per million, because the area is sparsely developed and traffic levels are relatively low.

Particulate matter is generated by industrial emissions, residential wood combustion, motor vehicle tailpipes, and fugitive dust from roadways and unpaved surfaces. Two forms of particulate matter are regulated by EPA: particulate matter less than 10 micrometers in size (PM10) and particulate matter less than 2.5 micrometers in size (PM2.5). PM2.5 has a greater health effect than PM10 at locations far from the emitting source, because it remains suspended in the atmosphere longer and travels farther. ODEQ does not monitor particulate matter in the study area. PM 10 and PM2.5 concentrations in the study area are likely to be less than the NAAQS, because the area is sparsely developed and traffic levels are relatively low.

3.15.2. Environmental Consequences—Proposed Action

Given the rural setting of the transmission line, the three pollutants that could increase as a result of project construction activities are CO, ozone, and particulate matter. Air quality could be affected during the estimated 8 months of project construction but would mostly be affected during peak construction (June 1 to November 1). An increase in particulate matter would be the main air quality concern. Fugitive dust could be created during structure construction, access road work, travel on unpaved surfaces, and other soil-disturbing activities. Although construction activities could increase dust and particulate levels, impacts would be low because they would be temporary and would occur in localized areas. Particulate matter levels would be

partially reduced by spraying water on road surfaces or by using another acceptable method to reduce dust during dry periods.

The operation of heavy equipment during construction could result in temporary increases in CO, carbon dioxide, sulfur oxides, oxides of nitrogen, and volatile organic hydrocarbons. The increase in vehicle emissions from construction equipment would be temporary and localized to specific work areas, and would change on a daily or weekly basis. The increase in vehicle and equipment emissions would likely be relatively small comparable to current emission levels found in agricultural and rural areas. For these reasons, impacts on air quality from construction activities would be low.

Air quality could be slightly affected during operation and maintenance of the transmission line. During operation, the transmission line emits limited amounts of ozone and oxides of nitrogen as a result of the corona effect. These substances would be released in quantities generally too small to be measured or to have an impact on humans, animals, or plants. Corona emissions under the Proposed Action would be similar to levels present under existing conditions. Vehicle emissions resulting from ongoing maintenance would be similar to existing conditions, and would be temporary and localized. For these reasons, impacts on air quality from operation and maintenance activities would be low.

3.15.3. Mitigation—Proposed Action

If the Proposed Action is implemented, BPA would implement the following mitigation measures to minimize impacts on air quality. See Section 3.16, Greenhouse Gas Emissions, of this EA for additional mitigation measures that relate to air quality.

- Use water trucks or other appropriate methods to control dust during construction, as needed.
- Set a speed limit for construction vehicles on unpaved access roads of no greater than 15 miles per hour to minimize dust.
- Ensure that all vehicle engines are maintained in good operating condition to minimize exhaust emissions.

3.15.4. Unavoidable Impacts Remaining After Mitigation—Proposed Action

There could be temporary increases in criteria pollutants during construction. Corona emissions under the Proposed Action would be similar to levels present under existing conditions. Although these impacts could not be totally mitigated or avoided, they would not violate current air quality standards and would be considered low.

3.15.5. Cumulative Impacts—Proposed Action

Vehicular traffic, logging activities, residential wood burning, road and transmission line maintenance, and operation of commercial and industrial facilities in the study area are all sources of air pollutants that will continue to emit pollutants. Current activities in the study area do not currently violate NAAQS. While the Proposed Action would cumulatively contribute a small amount to overall air pollutant levels, it is unlikely that cumulative concentrations would result in a violation of air quality standards.

3.15.6. Environmental Consequences—No Action Alternative

Under the No Action Alternative, the existing transmission line would not be rebuilt, and, therefore, impacts related to construction of the Rebuild Project would not occur. Operation and maintenance activities would continue and be similar to existing conditions, as described in Section 2.1.3. The corona effect resulting from operation of the existing transmission line would continue to have a low impact on air quality. Maintenance activities would likely increase as existing structures deteriorate and more structure repair and replacement could be required compared to existing conditions. Maintenance of access roads would be needed and access road work proposed under the Rebuild Project would likely need to take place as an operations and maintenance activity resulting in low impacts on air quality. Maintenance activities would continue to result in low impacts on air quality from emissions of criteria pollutants from vehicular traffic and equipment, mainly from the generation of dust and particulates in work areas.

This page left intentionally blank.

3.16. GREENHOUSE GASES

3.16.1. Affected Environment

Greenhouse gases (GHG) are chemical compounds found in the earth's atmosphere that absorb and trap infrared radiation as heat. The resulting build up of heat in the atmosphere increases temperatures, which causes warming of the planet through a greenhouse-like effect (U.S. Energy Information Administration 2009a). Human activities are causing an increase in atmospheric concentrations of GHGs. Increasing levels of GHGs could increase the earth's temperature up to 7.2 degrees Fahrenheit by the end of the twenty-first century (U.S. Environmental Protection Agency 2010a).

The principal GHGs emitted into the atmosphere through human activities are carbon dioxide (CO_2), methane, nitrous oxide, and fluorinated gases (U.S. Environmental Protection Agency 2010a). CO_2 is the major GHG emitted and the burning of fossil fuels accounts for 81% of all U.S. GHG emissions (U.S. Environmental Protection Agency 2010a; Houghton 2010; U.S. Energy Information Administration 2009b). CO_2 enters the atmosphere as a result of land use changes; through the burning of fossil fuels including coal, natural gas, oil, and wood products; and from the manufacturing of cement. By 2005, CO_2 levels had increased to 379 parts per million, a 36% increase, due to human activities (Intergovernmental Panel on Climate Change 2007). Appendix I provides additional information on CO_2 and other GHGs.

Global atmospheric GHG concentrations are a product of emissions (release) and removal (storage) over time. Soils store carbon in the form of decomposing plant material, serving as the largest carbon reservoir on land. When soils are disturbed, CO_2, methane, and nitrous oxide emissions increase (Kessavalou et al. 1998).

Trees and forests play an important role in the storage and release of carbon. Through the process of photosynthesis, plants capture atmospheric CO_2 and store carbon in the form of sugars. As trees grow, carbon is removed from the atmosphere. As trees decay or are burned, the stored carbon is released into the atmosphere (Ecological Society of America 2008). Under natural conditions, most dead trees are replaced with a new tree that would grow in its place, recreating a cyclical pattern of carbon storage and release. Minimum solid carbon storage occurs when a forested area is permanently converted to a non-forested area, such as grasslands or a development (e.g., buildings and roads).

EPA's mandatory reporting threshold for annual CO_2 emissions is 25,000 metric tons of CO_2 or CO_2 equivalent (CO_2e). Meeting or exceeding this threshold of emissions requires federal reporting of GHG emissions, but does not require any other action (Code of Federal Regulations, Title 40, Parts 86, 87, 89 et al.). This threshold is roughly the amount of CO_2 generated by 4,400 passenger vehicles per year.

GHG reporting protocols requires reporting of direct emissions (e.g., tailpipe) and indirect emissions (e.g., electricity use). Emissions from land use changes that result in the permanent removal trees are not considered as either direct or indirect emissions. Reporting of emissions resulting from land use changes is considered optional and, if reported, should not be added to direct or indirect emission calculations (The Climate Registry 2008). Although tree removal

does not immediately emit GHGs and is not considered a direct emission, analysis of land use related emissions accounts for the permanent loss of a carbon storage reservoir when vegetation is permanently removed.

3.16.2. Environmental Consequences—Proposed Action

GHG emissions were calculated for three types of Rebuild Project activities. Direct emissions would result from rebuilding the transmission line and from ongoing operations and maintenance for the estimated 50-year life of the transmission line. Electricity use in the construction office (indirect emissions) would be expected to be so minimal that they were not included in the calculations. GHG emissions that would result from land use changes (i.e., the permanent vegetation removal for construction of new access roads and additional structures) were also calculated. The assumptions and methods used in calculating GHG emissions from these activities are explained in Appendix I.

During construction, direct emissions would result from the use of gasoline- and diesel-powered vehicles, including cars, trucks, construction equipment, and helicopters. Vehicle and equipment (transportation) related emissions were estimated based on the approximate number of vehicles that would be used during construction and the approximate distance those vehicles would travel during construction (total vehicle round trips). During construction, transportation-related emissions would result in an estimated 9,900 metric tons of direct emissions of CO_2.

During construction, GHG emissions would also result from the permanent removal of vegetation for new access road construction and additional structure installation. Construction of new access roads would result in the creation of up to 4.6 acres of new road surface and shoulders that would be kept clear of trees. The addition of 19 transmission line structures would result in up to 4.4 acres of the right-of-way that would be kept clear of trees. Assuming each of the 9 acres contains the maximum level of carbon storage, the net carbon footprint associated with the removal of vegetation in 9 acres would be 12,100 metric tons of CO_2e. This method results in an overestimation of the GHG emissions, because portions of the new access road and structure construction areas are currently in pasture or managed right-of-way and do not contain mature trees.

During ongoing operation and maintenance, GHG emissions would result from the use of gasoline- and diesel-powered vehicles for routine patrols, routine and emergency maintenance work, resource review, and helicopter use for aerial inspections of the transmission line corridor. GHG emissions resulting from operations and maintenance work were calculated for the 50-year life span of the rebuilt transmission line. Rather than attempting to determine how much of the annual maintenance is attributable to maintenance of each transmission line in the corridor, the total of estimated trips to the transmission line corridor was used. This results in an overestimation of the GHG emissions resulting from maintenance and operations of the Bandon-Rogue transmission line because it also includes maintenance of the Fairview-Rogue transmission line. Operation and maintenance would result in an estimated 120 metric tons of CO_2e emissions per year, which translate to the annual CO_2 emissions of less than 21 passenger vehicle.

Total direct GHG emissions are estimated to be up to 9,900 metric tons of CO_2e for transportation-related emissions and 120 metric tons of CO_2e per year for operations and

maintenance. This level of direct emissions is roughly equivalent to use of 1,700 passenger vehicles for the initial year and the use of 21 passenger vehicles for all subsequent years. This level of emissions is below the EPA mandatory reporting threshold. Given this low amount of contribution, the impact on GHG concentrations from direct emissions would be considered low.

Total GHG emissions resulting from land use changes were estimated at 12,100 metric tons of CO_2e. Given this low amount of contribution, the Rebuild Project's impact on GHG concentrations from land use changes would be considered low.

3.16.3. Mitigation—Proposed Action

If the Proposed Action is implemented, BPA would implement the following mitigation measures to avoid or minimize impacts on GHG emissions. See Section 3.15, Air Quality, of this EA for additional mitigation measures that relate to minimizing GHG emissions.

- Implement vehicle idling and equipment emissions measures.
- Encourage carpooling and the use of shuttle vans among construction workers to minimize construction-related traffic and associated emissions.
- Locate staging areas as close to construction sites as practicable to minimize driving distances between staging areas and construction sites.
- Locate staging areas in previously disturbed or graveled areas to minimize soil and vegetation disturbance, where practicable.
- Encourage the use of the proper size of equipment for each job.
- Use alternative fuels for generators at construction sites such as propane or solar, or use electrical power, where practicable.
- Reduce electricity use in the construction office by using compact fluorescent bulbs and turning off computers and other electronic equipment every night, where possible.
- Recycle or salvage nonhazardous construction and demolition debris, where practicable.
- Dispose of wood poles in the local area, where practicable.
- Use local sources of rock for road construction and obtain road fill materials from weed-free quarries.

3.16.4. Unavoidable Impacts Remaining After Mitigation—Proposed Action

Unavoidable impacts would include slight increases in GHG releases. Total direct GHG emissions are estimated to be up to 9,900 metric tons of CO_2e for transportation-related emissions and 120 metric tons of CO_2e per year for operations and maintenance. This level of emissions is below the EPA mandatory reporting threshold. Given this low amount of contribution, the impact on GHG concentrations from direct emissions would be considered low. Total GHG emissions resulting from land use changes estimated as 12,100 metric tons of CO_2e, a low impact.

3.16.5. Cumulative Impacts—Proposed Action

All levels of GHG emissions, from small to large, play a role in cumulatively contributing to global GHG concentrations and climate change. Given this extremely low amount of contribution, however, the Rebuild Project's cumulative impact on GHG concentrations would be considered low.

3.16.6. Environmental Consequences—No Action Alternative

Under the No Action Alternative, the existing transmission line would not be rebuilt, and, therefore, the impacts related to the construction of the Rebuild Project would not occur. Operation and maintenance activities would continue similar to existing conditions, as described in Section 2.1.3. Maintenance activities would likely increase as existing structures deteriorate, and more structure repair and replacement could be required. Maintenance of access roads would be needed and road work proposed under the Rebuild Project would likely need to take place as an operations and maintenance activity. Operations and maintenance activities would result in very minor increases in GHG emissions. Because the increase in emissions would be so small, the impacts would be very low.

Chapter 4
Environmental Consultation, Review, and Permit Requirements

This chapter addresses statutes, implementing regulations, and executive orders applicable to the Proposed Action. This EA is being sent to tribes, federal agencies, state agencies, and state and local governments as part of the consultation process for the Proposed Action. Persons, tribes and agencies consulted are included in the list in Chapter 5, Persons, Tribes, and Agencies Consulted, of this EA.

4.1. NATIONAL ENVIRONMENTAL POLICY ACT

This EA was prepared pursuant to regulations implementing NEPA (42 USC 4321 et seq.), which requires federal agencies to assess the impacts that their actions may have on the environment. NEPA requires preparation of an EIS for major federal actions significantly affecting the quality of the human environment. BPA prepared this Preliminary EA to determine if the Rebuild Project would create any significant environmental impacts that would warrant preparing an EIS, or if a FONSI is justified.

4.2. FISH AND WILDLIFE

4.2.1. Endangered Species Act

The ESA (16 USC 1536) establishes a national program for the conservation of threatened and endangered species of fish, wildlife, and plants, and the preservation of the ecosystems on which they depend. The ESA is administered by USFWS for terrestrial species and some freshwater fish species, and by NMFS for anadromous fish and marine species.

Section 7(a) of the ESA requires federal agencies to ensure that the actions they authorize, fund, and carry out do not jeopardize the continued existence of any endangered or threatened species or result in the destruction or adverse modification of critical habitat. Section 7(c) of the ESA and other federal regulations require that federal agencies prepare a biological assessment (BA) addressing the potential effects of their actions on listed or proposed endangered species and critical habitats.

BPA used the following resources to determine which endangered and threatened species and critical habitat occur in the study area as defined in Section 3.10, Wildlife, of this EA:

- USFWS lists of fish, wildlife, and plant species in Coos and Curry counties that are protected under the ESA (U.S. Fish and Wildlife Service 2010);
- NMFS list of fish species protected under the ESA (National Marine Fisheries Service 2009); and
- Oregon Natural Heritage database records of known special status species locations in the study area (Oregon Natural Heritage Information Center 2009 and 2010.)

BPA ~~is currently~~entered into preconsultation with NMFS concerning potential effects on two ESUs of coho salmon that occur in the study area. Both ESUs are federally listed as threatened species. The OC coho ESU extends northward from the Sixes River and the SONCC coho ESU extends southward from the Elk River. Designated critical habitat for both OC coho and SONCC coho is present in the study area. The status of coho in some tributaries and headwaters of study area streams is currently undetermined. BPA relied on current and historical fish distribution data from ODFW and NMFS to determine coho presence (Confer pers. comm.; Claire pers. comm.; Collins pers. comm.).

Pursuant to the requirements of Section 7(c) of the ESA, BPA ~~is preparing~~prepared a BA ~~that will be~~ and submitted it to NMFS. The BA addresses effects of the Proposed Action on OC and SONCC coho salmon ESUs and designated critical habitat. In addition to phone and email communications regarding potential effects and the contents of the BA, several preconsultation meetings were held with NMFS staff: March 4, 2010, Roseburg, OR; March 24, 2010, Portland, OR; April 7, 2010, Roseburg; April 28 and 29, 2010, site visit of project vicinity; October 22, 2010, Roseburg; and November 16, 2010, site visit of project vicinity, and February 2, 2011, meeting with NMFS project design engineer. BPA submitted a draft BA to NMFS for comment in December 2010 as part of the preconsultation process and ~~is currently~~ addressed~~ing~~ comments.

BPA ~~expects to~~ submitted the final BA to NMFS o~~i~~n ~~January~~ February 7, 2011, with a request to enter into formal consultation. Based on the information and analysis of effects within the BA, BPA determined that the Rebuild Project would not be likely to adversely affect OC coho ESU, would be likely to adversely affect SONCC coho ESU, and would not adversely modify designated OC and SONCC coho ESU critical habitat. BPA ~~will~~ requested concurrence with its determination of effect on the OC and SONCC coho ESUs and designated critical habitat. BPA requested preparation of a biological opinion (BO) and incidental take statement pursuant to Section 7 of the ESA. The potential effects on coho salmon ESUs and their designated critical habitat are discussed in Section 3.9, Fish, of this EA. NMFS is currently drafting a BO for the Rebuild Project.

BPA prepared a BA for USFWS that addresses effects of the Proposed Action on marbled murrelet, northern spotted owl, and western lily (all federally listed as threatened). There is no designated critical habitat for these species in the study area. In addition to phone and email communications regarding potential effects and the contents of the BA, preconsultation meetings were held with USFWS staff: March 4 and November 18, 2010, Roseburg, OR. BPA submitted a draft BA to USFWS for comment in December 2010 as part of the preconsultation process and addressed questions and comments in the final BA. BPA submitted the final BA to USFWS on January 13, 2011, with a request to enter into informal consultation and for concurrence with BPA's determination of effect. BPA determined that the Rebuild Project may effect, but is not likely to adversely affect, marbled murrelet, northern spotted owl, and western lily. USFWS concurred with BPA's determination of effect for these species and listed conservation measures that must be implemented in a letter dated February 3, 2011. These conservation measures will be implemented. Potential effects on marbled murrelet and spotted owl are discussed in Section 3.10, Wildlife, of this EA. Potential effects to western lily are discussed in Section 3.5, Vegetation, of this EA.

4.2.2. Fish and Wildlife Conservation

The Fish and Wildlife Conservation Act of 1980 (16 USC 2901 et seq.) encourages federal agencies to conserve and promote conservation of non-game fish and wildlife and their habitats. The Fish and Wildlife Coordination Act (16 USC 661 et seq.) requires federal agencies with projects affecting water resources to consult with USFWS and the state agency responsible for fish and wildlife resources. The analysis in Sections 3.9, Fish, and 3.10, Wildlife, of this EA indicates that the alternatives would have low to moderate impacts on fish and wildlife, with implementation of appropriate mitigation.

BPA coordinated with ODFW biologists concerning Rebuild Project activities with the potential to affect fish and wildlife. BPA and ODFW fish and wildlife biologists held an initial scoping meeting to discuss the Proposed Action on February 25, 2010. Field visits to area streams were held with ODFW, NMFS, and BPA staff on April 28 and April 29, 2010, and again on November 16, 2010. Local fish and wildlife biologists have provided valuable input concerning the presence of fish and wildlife species and potential effects, via phone and email communications, throughout the environmental review process. Mitigation measures designed to conserve fish and wildlife and their habitats are listed in Sections 3.5, Vegetation; 3.9, Fish; and 3.10, Wildlife, of this EA.

BPA coordinated with USFWS staff regarding potential effects on wildlife, including effects on federally listed species (See 4.2.1 above) and on bald eagles (See 4.2.4 and 4.2.5 below).

BPA coordinated with NMFS staff regarding potential effects ~~on fish, including effects~~ on federally listed coho~~species~~ and critical habitat for coho (See 4.2.1 above) and EFH for coho and Chinook (See 4.2.3 below) ~~and on bald eagles (See 4.2.4 and 4.2.3 below)~~.

4.2.3. Essential Fish Habitat

Public Law 104–297, the Sustainable Fisheries Act of 1996, amended the Magnuson-Stevens Fishery Conservation and Management Act. Under Section 305(b)(4) of the Act, BPA is required to consult with NMFS for actions that adversely affect EFH; NMFS, in turn, is required to provide EFH conservation and enhancement recommendations.

Chinook and coho salmon, which are administered under the amended Magnuson-Stevens Fishery Conservation and Management Act, are found in streams in or near the project vicinity. Most streams in the study area, as defined in Section 3.9, Fish, of this EA, are designated EFH for coho and Chinook salmon, except for the streams in the northernmost portion of the study area (Johnson, Crooked, and China creeks). Although coho and Chinook salmon are not present in or near all of the potential construction areas within the study area due to natural or constructed fish passage barriers, EFH downstream of project activities could be temporarily degraded due to increased water temperatures and increased levels of total suspended solids and turbidity that degrade water quality. Because the Proposed Action has the potential to adversely affect EFH, BPA is preparing an assessment of EFH. BPA submitted a draft EFH Assessment to NMFS for comment in December 2010 as part of the preconsultation process. BPA ~~expects to~~ submitted the final EFH Assessment to NMFS ~~in January 2011~~ on February 7, 2011. The potential effects on Pacific Coast salmon EFH are discussed in Section 3.9, Fish, of this EA.

4.2.4. Migratory Bird Treaty Act

The Migratory Bird Treaty Act implements various treaties and conventions between the United States and other countries, including Canada, Japan, Mexico, and the former Soviet Union, for the protection of migratory birds (16 USC. 703–712, July 3, 1918, as amended in 1936, 1960, 1968, 1969, 1974, 1978, 1986, and 1989). Under the Act, taking, killing, or possessing migratory birds, or their eggs or nests, is unlawful. The Act classifies most species of birds as migratory, except for upland and nonnative birds such as pheasant, chukar, gray partridge, house sparrow, European starling, and rock dove.

The U.S. Department of Energy and USFWS have a memorandum of understanding (MOU) to address migratory bird conservation in accordance with Executive Order 13186, discussed below (U.S. Department of Energy and U.S. Fish and Wildlife Service 2006). BPA follows this MOU to minimize potential impacts on migratory birds. The Proposed Action may affect migratory birds through loss of habitat and potential for collisions with the transmission line. Potential effects and mitigation are discussed in Sections 3.10, Wildlife, and 4.2.5 of this EA.

4.2.5. Responsibilities of Federal Agencies to Protect Migratory Birds

Executive Order 13186 directs federal agencies whose actions may negatively affect migratory bird populations to work with USFWS to develop an agreement to conserve migratory birds. As described above, the U.S. Department of Energy and USFWS have an MOU to address migratory bird conservation in accordance with this executive order (U.S. Department of Energy and U.S. Fish and Wildlife Service 2006). The MOU addresses how both agencies can work cooperatively to address migratory bird conservation and includes specific measures to consider implementing during project planning and implementation.

BPA would implement feasible measures, including the design of transmission lines to minimize the potential for avian collisions. The existing north-south alignment of this transmission line would be retained; it is less of a problem to migratory birds than an east-west alignment. The larger conductor that would be used could make it more visible to birds, decreasing the potential for collisions. Because no areas along the corridor are known to be particularly problematic for avian collisions, moving structures was not considered. There are areas along the right-of-way identified by ODFW biologists where migratory birds are known to congregate or that have the potential to attract migratory species. In these areas, spiral bird diverters would be installed on the conductor ~~and overhead ground wire~~ to make it more visible. The Bandon-Rogue transmission line would continue to operate at 115 kV. This transmission line is designed with conductors spaced far enough apart to prevent electrocution of raptors.

Other measures recommended under the MOU address migratory bird habitat. One measure advocates for construction outside the nesting season, but it would not be possible to schedule construction activities after nesting season in this area. The combination of heavy rains in fall, winter, and early spring; fragile soils; and steep slopes make it inadvisable to construct during the rainy season. Compaction and disturbance of wet soils are harmful to habitats and causes roads to deteriorate. Disturbed areas would be reseeded with desirable plant species to encourage migratory bird use, unless specific planting mixes are agreed upon with landowners. The control of weed species to avoid degradation of wildlife habitat would also be implemented.

Danger tree removal would be conducted after August 15 to minimize displacement of nesting birds.

Construction, operation, and maintenance of the Rebuild Project would result in low to moderate impacts on migratory birds, as a result of loss of habitat or direct mortality, as discussed in Section 3.10, Wildlife, of this EA.

4.2.6. Bald Eagle and Golden Eagle Protection Act

The Bald Eagle and Golden Eagle Protection Act (16 USC. 668–668d, June 8, 1940, as amended in 1959, 1962, 1972, and 1978) addresses "take" of eagles, which includes both the disturbance of eagles or killing eagles. Bald and golden eagles occur in the project vicinity. The Oregon Natural Heritage Database has records of three known bald eagle nests within 1 to 2 miles of the transmission line corridor, located along the Rogue River, Lower Two Mile Creek, and Floras Lake (Oregon Natural Heritage Information Center 2009).

BPA requested information on the current state of these bald eagle nests from USFWS, ODFW, and Kalmiopsis Audubon. Bald eagle sitings have occurred within or near the study area near Langlois Mountain (Vileisas pers. comm.). ODFW wildlife biologists stated that it is likely that bald eagles use the study area (Edwards pers. comm.; Love pers. comm.). USFWS provided updated information on bald eagle status in the study area (Maurice pers. comm.). The closest known active bald eagle nest is approximately 1,600 feet east of the transmission line.

There are no known golden eagle nests within 2 miles of the right-of-way, although golden eagles are known to nest in the Coast Range. Golden eagle sitings have occurred within or near the study area near Bethel Mountain (Maurice pers. comm.).

Under the Bald Eagle and Golden Eagle Protection Act, "whoever…shall knowingly, or with wanton disregard for the consequences of his act take, possess, sell, purchase, barter, offer to sell, purchase or barter, transport, export or import" bald or golden eagles or their parts, nest, or eggs without a permit will be subject to criminal and/or civil sanctions (16 USC 668a). As discussed in Section 3.10, Wildlife, of this EA, there have been no known collisions of eagles with the existing transmission line or its conductor, and spiral bird diverters would be used in some of the longer spans over rivers and floodplains to help prevent collisions. This mitigation would help avoid and minimize impacts on eagles and other birds. Because the Proposed Action would not involve knowing take or other acts in wanton disregard of bald or golden eagles, implementation of the Rebuild Project would not be expected to violate the provisions of the Bald Eagle and Golden Eagle Protection Act.

4.3. FLOODPLAINS AND WETLANDS PROTECTION

As part of the NEPA review, U.S. Department of Energy NEPA regulations require that impacts on floodplains and wetlands be assessed and alternatives for protection of these resources be evaluated in accordance with Compliance with Floodplain/Wetlands Environmental Review Requirements (10 CFR 1022.12) and Executive Orders 11988 and 11990. Evaluation of impacts of the Proposed Action on floodplains and wetlands are discussed briefly below and in more detail in Sections 3.7, Wetlands, and 3.8, Floodplains, of this EA.

Efforts were made during the Rebuild Project design phase to avoid or minimize impacts on floodplains and wetlands. Based on the location of 100-year floodplains, project design staff were able to site project activities outside floodplains. Wetlands were identified near structure locations (existing and proposed) and along access roads. Efforts were made to avoid or minimize impacts to each wetland area. For those wetlands that would be unavoidably impacted, BPA will ~~send notice of~~include information on the proposed wetland and floodplain impacts in this EA and distribute it to appropriate government agencies, including the Federal Emergency Management Agency regional office, DSL, tribes, and local governments.

Wetland and waterway management, regulation, and protection are addressed in several sections of the Clean Water Act, including Sections 401, 402, and 404. The various sections applicable to the Proposed Action are discussed below.

Section 401. A federal permit to conduct an activity that causes discharges into navigable waters is issued only after the affected state certifies that existing water quality standards would not be violated if the permit were issued. ODEQ would review the Rebuild Project's 404 permit application for compliance. Oregon's current turbidity standard (Oregon Administrative Rule [OAR] 340-41-0036) requires that turbidity not increase more than 10% from background levels as measured at an upstream control point.

Section 402. This section authorizes stormwater discharges under the National Pollutant Discharge Elimination System. The EPA, Region 10, has a general permit for federal facilities for discharges from construction activities. BPA would issue a Notice of Intent to obtain coverage under this general permit, and is preparing a Stormwater Pollution Prevention Plan to address stabilization practices, structural practices, stormwater management, and other controls (see Section 3.6, Waterways and Water Quality, of this EA).

Section 404. Authorization from the U.S. Army Corps of Engineers is required in accordance with the provisions of Section 404 of the Clean Water Act when dredged or fill material is discharged into waters of the United States including wetlands. Impacts on wetlands are described in Section 3.7, Wetlands, of this EA. BPA ~~will apply~~applied for a permit under Section 404 for unavoidable wetland impacts. The permit application ~~is currently being assembled, and it is expected that it will be ready for submittal for review in January~~was submitted in March 2011. The Proposed Action would result in less than 0.5 acre of temporary and permanent fill in wetlands from structure removal and installation, culvert installation, and road reconstruction.

Oregon's Removal Fill Law (Oregon Revised Statute [ORS] 196.795-990), administered by the DSL, requires a permit for removal or material or placement of fill in waters of the state, which include waterways and wetlands. Some activities, such as culvert replacement, are exempt from this requirement. BPA is coordinating with DSL to determine which activities are subject to the Removal Fill Law and will meet the requirements, as part of the Coastal Zone Management Act (CZMA) (16 USC Sections 1451–1464) consistency determination, discussed below. BPA submitted the wetland delineation for this project to DSL for review in December 2010. BPA submitted a Joint Permit Application to DSL in March 2011; DSL is distributing the application for public review in April 2011.

4.4. COASTAL ZONE MANAGEMENT ACT

As an agency of the federal government, BPA would follow the guidelines of the CZMA to ensure that Rebuild Project activities are, to the maximum extent practicable, consistent with the enforceable policies of the state management programs. Because the Rebuild Project is within Oregon's coastal zone, which includes both Coos and Curry counties, BPA is subject to the coordination and consistency requirements of CZMA.

The State of Oregon has an approved Coastal Zone Management Program, Oregon Coastal Management Program (OCMP), which is implemented by the Oregon Department of Land Conservation and Development (DLCD). The CZMA requires that "each federal agency activity within or outside the coastal zone that affects any land or water use or natural resource of the coastal zone shall be carried out in a manner which is consistent to the maximum extent practicable with the enforceable policies of approved state management programs" (16 USC 1456c(1)(A)). OCMP policies include the statewide planning goals, county and city comprehensive plans, and state natural resource laws.

BPA is designing and planning to implement the Rebuild Project in such a way that it would be consistent to the maximum extent practicable with the OCMP. BPA has notified Coos County, Curry County, and DLCD about the Proposed Action. BPA ~~will~~ worked with Coos and Curry County Planning Departments and received their signatures on Block 7 of the Joint Permit Application, which states that after review of the Rebuild Project it was determined that the Proposed Action is consistent with the Coos County and Curry County Comprehensive Plans and local land use regulations. ~~Curry County Planning staff and DSL and~~ BPA submitted a consistency statement to DLCD~~, once the wetland permit application is ready for submittal~~ on April 18, 2011 and DLCD released the Public Notice for public review on April 18, 2011.

4.5. STATE, AREAWIDE, AND LOCAL PLAN AND PROGRAM CONSISTENCY

BPA, as a federal agency, is not required to comply with the requirements associated with obtaining state and local land-use approvals or permits, because Congress has not waived federal supremacy over these areas. As a federal agency, BPA only obtains those state and local permits for which Congress has clearly and unambiguously waived sovereign immunity. However, BPA would, to the maximum extent practical, strive to meet or exceed the substantive standards and policies of the following environmental regulations.

4.5.1. Land Use Planning Framework

The following local land use plans guide development in the area affected by the Rebuild Project:

Coos County Comprehensive Plan

Land crossed by the transmission line in Coos County falls under one of the following zoning designations (Coos County 2010):

- **Exclusive Agriculture.** The purpose of this district is to preserve agricultural lands and limit conflicts between farms and non-farm uses.
- **Forest.** This district is intended to recognize and protect lands engaged in forest uses.
- **Rural Residential.** These lands allow for home sites outside of established urban areas, where moderate intensity development is appropriate; rural residential lands act as a transition area between the high intensity of urban areas and the rural character of agricultural and forest lands.

The Rebuild Project would use an existing corridor and would be consistent with these land use plans to the extent practicable.

Curry County Comprehensive Plan

The Curry County Comprehensive Plan was adopted in 1982 and updated in 2009. Land crossed by the transmission line in Curry County falls under one of the following zoning designations (Curry County 2010):

- **Forestry Grazing.** This designation applies to resource lands where the primary use is commercial forestry or agricultural grazing; it applies to most of the land crossed by the transmission line in Curry County.
- **Rural Residential.** This designation is intended to provide for low-density residential development outside urban areas; minimum lot sizes range from 2 to 10 acres.
- **Public Facilities.** This designation applies to lands, publicly or privately owned, to provide for the development of necessary public facilities and services, such as schools, highways, or government structures.

The Rebuild Project would use an existing corridor and would be consistent with these land use plans to the extent practicable. See Section 3.2, Land Use, of this EA for further discussion.

4.6. OREGON FOREST PRACTICES ACT

The Oregon Forest Practices Act (FPA) and Forest Practices Rules and Regulations are the state's principal means of regulating activities on non-federal forestlands. The FPA rules and regulations are administered by Oregon Department of Forestry. Because the FPA does not apply to federal agencies on non-federal land, BPA would not obtain an FPA permit from the state. BPA would attempt to comply with the FPA, where possible. The *Stormwater Management Manual for Western Washington* (Washington State Department of Ecology 2005) is used by BPA for design and implementation standards, including best management practices applicable to the Proposed Action. Project specifications include substantial compliance with the BMPs described in the FPA. In addition, as required under the FPA, BPA has been consulting with ODFW to consider ways to protect critical habitats including riparian areas, wetlands, and habitat.

4.7. CULTURAL AND HISTORICAL RESOURCES

Laws and regulations govern management of cultural resources. A cultural resource is an object, structure, building, site, or district that provides irreplaceable evidence of natural or human

history of national, state, or local significance, such as National Landmarks, archeological sites, and properties listed (or eligible for listing) on the NRHP. Cultural resource related laws and regulations include:

- Antiquities Act of 1906 (16 USC 431–433)
- Historic Sites Act of 1935 (16 USC 461–467)
- Section 106 of the NHPA (16 USC 470 et seq.), as amended
- Archaeological Data Preservation Act of 1974 (16 USC 469 a–c)
- Archaeological Resources Protection Act of 1979 (16 USC 470 et seq.), as amended
- Native American Graves Protection and Repatriation Act (25 USC 3001 et seq.)
- Executive Order 13007 Indian Sacred Sites
- Oregon state law (ORS 97.740–97.760, 358.905–358.955, and 390.235) defines state regulation of archaeological and historic sites
- ORS 390.235 contains information on permits and conditions for excavation or removal of archaeological or historic materials
- ORS 97.740–97.760 prohibits disturbance of Indian burials

Section 106 of the NHPA requires federal agencies to consider the effects of their actions on historic properties. The NHPA provides a process, known as the Section 106 process that enables agencies to assess impacts on historic properties along with participation from interested and affected parties such as tribes, and then avoid, minimize, or mitigate for these impacts. Historic properties may be prehistoric or historic sites, including objects and structures that are included in or eligible for inclusion in the NRHP. Historic properties also include artifacts or remains within historic sites and properties of traditional and cultural importance to tribes.

To this end, BPA has provided information about the Proposed Action to and requested input on the level and type of proposed identification and evaluation efforts of the prehistoric resources from the SHPO, BLM archeologist, Oregon State Parks archeologist, and the following tribes:

- Confederated Tribes of the Coos, Lower Umpqua, and Siuslaw Indians,
- Confederated Tribes of the Grande Ronde Community of Oregon,
- Confederated Tribes of the Siletz,
- Cow Creek Band of the Umpqua Tribe of Indians,
- Klamath Tribes,
- Coquille Indian Tribe, and
- Smith River Rancheria.

The Confederated Tribes of the Coos, Lower Umpqua, and Siuslaw Indians, the Klamath Tribes, Cow Creek Band of the Umpqua Tribe of Indians, and the Confederated Tribes of the Grande Ronde Community of Oregon elected not to participate in consultation, because the area that could be affected by the Proposed Action is outside of their traditional territories.

The remaining tribes listed above are continuing to participate in consultation. The cultural resources report for the Rebuild Project was submitted to the consulting tribes, SHPO, and Oregon State Parks archeologist in December 2010. BPA evaluated historic transmission line facilities, as described in Section 3.11, Cultural Resources, of this EA, for eligibility to the NRHP. BPA made a determination of no adverse effect on these facilities as a result of the

Rebuild Project. BPA consulted with the SHPO, State Parks archeologist, and consulting tribes on the determination of no adverse effect on the Bandon-Rogue transmission line. BPA received concurrence from the SHPO on December 29, 2010. Tribes did not submit any comments.

BPA received conditional concurrence from the SHPO with the Rebuild Project determination of no adverse effect on January 5, 2010, for prehistoric resources. Some further cultural resource surveys are needed in a few locations where access was not available at the time of the survey, in a few areas where project elements had changed, and where roads designated as travel roads were also surveyed. Two Addendum Cultural Resource Survey Reports were submitted to consulting parties on March 10, 2011, and April 18, 2011.

BPA ~~will~~ evaluated three of the four prehistoric sites to determine if they are eligible for the NRHP, and if so, whether the Proposed Action could adversely affect these sites. ~~If t~~Based on the evaluation and testing, BPA will treat these sites as eligible for the NRHP. BPA is~~would~~ working closely with the SHPO and consulting tribes to avoid or minimize impacts on the sites through creation of a Mitigation Plan. The other prehistoric site is assumed to be eligible for the NRHP, because BPA was unable to obtain a permit to test the site, because the landowner did not grant permission for testing. Because some impacts on portions of these sites are unavoidable, the integrity of these sites could be affected and associated information could be lost. Impacts on resources protected by NHPA are expected to be low to moderate after mitigation, depending on the level and amount of impacts.

4.8. AIR QUALITY

The federal Clean Air Act, as revised in 1990 (Public Law [PL] 101–542 (42 USC 7401), requires the EPA and individual states to carry out a wide range of regulatory programs intended to assure attainment of the NAAQS. In Oregon, the EPA has delegated authority to the ODEQ. Because the Rebuild Project would occur in an area that is currently in attainment for meeting the NAAQS and because no stationary sources of air emissions would occur, construction activities associated with the Rebuild Project are exempted for state regulation.

4.9. GLOBAL WARMING

Gases that absorb infrared radiation and prevent heat loss to space are called GHGs. Models predict that atmospheric concentrations of all GHGs will increase over the next century, but the extent and rate of change is difficult to predict, especially on a global scale. As a response to concerns over the predicted increase of global GHG levels, various federal and state mandates address the need to reduce GHG emissions, including the following.

- The Clean Air Act is a federal law that establishes regulations to control emissions from large generation sources such as power plants; limited regulation of GHG emissions occurs through New Source Review.
- The EPA has issued the *Final Mandatory Reporting of Greenhouse Gases Rule* that requires reporting of GHG emissions from large sources. Under the rule, suppliers of fossil fuels or industrial GHGs, manufacturers of vehicles and engines, and facilities that emit 25,000 metric tons or more per year of GHGs are required to submit annual reports to the EPA (U.S. Environmental Protection Agency 2010b).

- Executive Orders 13423 and 13514 require federal agencies to measure, manage, and reduce GHG emissions by agency-defined target amounts and dates.
- In Washington State, Executive Orders 07-02 and 09-05 direct state agencies to work with western states and Canadian provinces to develop a regional emissions reduction program designed to reduce GHG emissions to 1990 levels by 2020 (Washington State Department of Ecology 2010).
- In Oregon, House Bill 3543, from 2007 (ORS 468A.205), directs state and local governments, businesses, nonprofit organizations and individual residents to reduce GHG emissions by 2010. By 2020, the state is directed to achieve GHG levels that are 10% below 1990 levels. By 2050, the state is directed to achieve GHG levels that are at least 75% below 1990 levels (Oregon Global Warming Commission 2010).

GHG emissions were calculated for Rebuild Project activities that produce GHG emissions: transportation-related direct emissions resulting from construction activities, ongoing operations and maintenance activities for the estimated 50-year operational life of the transmission line, and permanent vegetation removal for new roads and installation of 19 additional structures. GHG emissions would be below EPA's mandatory reporting threshold. The impact of the Proposed Action on GHG concentrations would be low, as discussed in Section 3.16, Greenhouse Gas Emissions, of this EA.

4.10. HAZARDOUS MATERIALS

The application of several regulations that pertain to the management and use of hazardous materials to the Rebuild Project are summarized below.

4.10.1. The Spill Prevention Control and Countermeasures Act

The Spill Prevention Control and Countermeasures Act is intended to prevent discharges of oil and oil-related materials from reaching navigable waters and adjoining shorelines. It applies to facilities with total above-ground oil storage capacity (not actual gallons on site) of greater than 1,320 gallons and facilities with below-ground storage capacity of 42,000 gallons. No on-site storage of oil or oil-related materials is proposed as part of the Rebuild Project.

4.10.2. Title III of the Superfund Amendments Act

Title III of the Superfund Amendments and Reauthorization Act provides funding for hazardous materials training in emergency planning, preparedness, mitigation implementation, response, and recovery. Eligible individuals include public officials, emergency service responders, medical personnel, and other tribal response and planning personnel. No hazardous materials sites are located within the project area.

4.10.3. Uniform Fire Code

The development of a Hazardous Materials Management Plan may also be required by local fire districts in accordance with the Uniform Fire Code. BPA would develop and implement such a plan, if required.

4.10.4. Toxic Substances Control Act

The Toxic Substances Control Act is intended to protect human health and the environment from toxic chemicals. Section 6 of the act regulates the use, storage, and disposal of polychlorinated biphenyls (PCBs). BPA adopted guidelines to ensure that PCBs are not introduced into the environment. Equipment used for the Rebuild Project would not contain PCBs. Any equipment removed that may have PCBs would be handled according to the disposal provisions of this act.

4.10.5. Federal Insecticide, Fungicide, and Rodenticide Act

The Federal Insecticide, Fungicide and Rodenticide Act registers and regulates pesticides. BPA uses herbicides (a kind of pesticide) during vegetation management. Herbicides are used on transmission line rights-of-way, along access roads, and in substation yards to control vegetation, including noxious weeds. When BPA uses herbicides, the date, dose, and chemical used are recorded and reported to state government officials. Herbicide containers are disposed of according to Resource Conservation and Recovery Act (RCRA) standards.

4.10.6. Resource Conservation and Recovery Act

The RCRA, as amended, is designed to provide a program for managing and controlling hazardous waste by imposing requirements on generators and transporters of this waste, and on owners and operators of treatment, storage, and disposal facilities. Each facility owner or operator is required to have a permit issued by EPA or the state. Typical construction and maintenance activities, in BPA's experience, have generated small amounts of these hazardous wastes: solvents, pesticides, paint products, motor and lubricating oils, and cleaners. Small amounts of hazardous wastes may be generated by the project. These materials would be disposed of according to state law and RCRA.

If a hazardous material, toxic substance, or petroleum product is discovered, and may pose an immediate threat to human health or the environment, BPA requires that the contractor notify the Contracting Officer's Technical Representative (COTR) immediately. Other conditions such as large dump sites, drums of unknown substances, suspicious odors, stained soil must also be reported immediately to the COTR. The COTR would coordinate with the appropriate BPA personnel. In addition, the contractor would not be allowed to disturb such conditions until the COTR has given the notice to proceed.

4.11. EXECUTIVE ORDER ON ENVIRONMENTAL JUSTICE

In February 1994, Executive Order 12898, Federal Actions to Address Environmental Justice in Minority and Low-Income Populations, was released to federal agencies. This order states that federal agencies shall identify and address, as appropriate, disproportionately high and adverse human health or environmental effects of its programs, policies, and activities on minority and low-income populations. The Proposed Action would not cause disproportionately high and adverse impacts on minority and low-income populations. Section 3.12, Socioeconomics and Public Facilities, of this EA contains a discussion on environmental justice.

4.12. NOISE

The Federal Noise Control Act of 1972 (42 USC 4901) requires that federal entities, such as BPA, comply with state and local noise requirements. Environmental noise is regulated by the state of Oregon which establish limits on levels and duration of noise. Temporary construction is exempted from state and local regulation. The analysis in Section 3.13, Noise, of this EA indicates that the alternatives would have low to moderate impacts, with implementation of appropriate mitigation.

4.13. TRANSPORTATION

According to the Oregon Revised Statutes Chapter 818 (Vehicle Limits), oversize or overweight vehicles need transportation permits to travel on highways and local public roads in the state. The construction contractors for the Rebuild Project would consult with the Oregon Department of Transportation, Coos County Public Works Department, and Curry County Public Works Department County to secure necessary transportation permits for oversize or overweight vehicles used for project construction.

In the project vicinity, there are width and/or height restrictions on U.S. 101 at Coquille River Bridge and height restrictions on State Route 42 at the U.S. 101 over-crossing (Oregon Department of Transportation 2010b). BPA engineers and surveyors have consulted with the Oregon Department of Transportation concerning activities within these control zones.

4.14. FEDERAL COMMUNICATIONS COMMISSION

Federal Communications Commission (FCC) regulations require that transmission lines be operated so that radio and television reception would not be seriously degraded or repeatedly interrupted. The FCC regulations require that impacts to reception be mitigated. It is expected that the Proposed Action would cause no interference with radio, television, or other reception (See Section 3.14, Public Health and Safety, of this EA). BPA would comply with FCC requirements and investigate any complaints about electromagnetic interference, if any interference occurs.

4.15. FARMLAND PROTECTION POLICY ACT

The Farmland Protection Policy Act (7 USC 4201 et seq.) directs federal agencies to identify and quantify adverse impacts of federal programs on farmlands. The purpose of this act is to minimize the number of federal programs that contribute to the unnecessary and irreversible conversion of agricultural land to non-agricultural uses. As discussed in Section 3.2, Land Use, of this EA, the Proposed Action would covert an extremely small area (less than 0.5 acre) of agricultural land to access roads. Other potential impacts on agricultural lands are discussed in Section 3.2, Land Use, of this EA.

4.16. NOTICE TO THE FEDERAL AVIATION ADMINISTRATION

As part of transmission line design, BPA seeks to comply with Federal Aviation Administration (FAA) procedures. Final locations, structures, and structure heights would not be submitted to FAA for the project because no structures are taller than 200 feet above ground, and they are located outside the prescribed distances of airports listed in the FAA airport directory.

4.17. PERMITS FOR RIGHT-OF-WAY ON PUBLIC LANDS

The Rebuild Project would cross land administered by BLM. BPA is coordinating with BLM to meet their requirements for crossing their lands and has submitted a SF299 form, detailing all proposed activities to the Coos Bay BLM District Realty staff.

4.18. REQUIREMENTS NOT APPLICABLE TO THIS PROJECT

4.18.1. Permits for Structures in Navigable Waters

The Rebuild Project would not involve construction, removal, or rehabilitation of any structures in navigable waters.

4.18.2. Safe Drinking Water Act

No drinking water systems are affected by the Rebuild Project, and no pollutants are expected to reach drinking water supplies.

4.18.3. Energy Conservation at Federal Facilities

Energy conservation practices are not relevant because no federal buildings would be constructed.

4.18.4. Recreation Resources

The Wild and Scenic Inventory of listed and proposed rivers was reviewed to determine if any of the rivers in the project area are qualify as wild, scenic, or recreational. The transmission line right-of-way crosses the Elk River. Although some portions of the Elk River are designed as a wild, scenic, or recreational river, none of these segments occurs within the right-of-way.

The Northwest Power Planning Council's Protected Area Amendments to the Pacific Northwest Electric Power Planning Council Designation Act of 1980 are not applicable to the Rebuild Project.

No designated wilderness or other areas of national environmental concern are found on or around the right-of-way.

Chapter 5
Persons, Tribes, and Agencies Consulted

5.1. INTRODUCTION

The mailing list for the Bandon-Rogue Transmission Line Rebuild Project (Rebuild Project) includes local, state, and federal agencies; public officials; tribes, landowners, and trustees in the project vicinity; utilities; nonprofit organizations; libraries; media; and others who expressed an interest in the Rebuild Project. Specific individuals were contacted to gather information and data about the project vicinity and applicable requirements, as part of consultation, or for permit applications.

5.2. FEDERAL

The following federal agencies and representatives were contacted:

- Federal Emergency Management Agency, Federal Regional Center
- National Oceanic and Atmospheric Administration, National Marine Fisheries Service, Branch of Southwest Oregon Habitat
- U.S. Army Corps of Engineers
- U.S. Department of Agriculture, Natural Resource Conservation Services, Coos County Coquille Service Center
- U.S. Department of the Interior, Bureau of Land Management, Coos Bay District Office
- U.S. Fish and Wildlife Service, Land and Water Division, Energy Program
- U.S. Fish and Wildlife Service, Newport Field Office
- U.S. Fish and Wildlife Service, Oregon State Office
- U.S. Fish and Wildlife Service, Roseburg Field Office
- U.S. Fish and Wildlife Service, State Supervisor's Office
- U.S. Forest Service, Southwest Oregon Forest Insect and Disease Service Center
- U.S. Representatives and Senators for districts encompassing the project area

5.3. STATE

The following state agencies and representatives were contacted:

- Office of the Governor
- Oregon Department of Agriculture, Noxious Weed Control
- Oregon Department of Agriculture, Plant Conservation Program
- Oregon Department of Energy, Energy Facility Siting & Evaluation Council
- Oregon Department of Environmental Quality, Coos Bay Office
- Oregon Department of Fish & Wildlife, Charleston Field Office
- Oregon Department of Fish & Wildlife, Conservation Program
- Oregon Department of Fish & Wildlife, Gold Beach Office
- Oregon Department of Fish & Wildlife, Habitat Resource Program
- Oregon Department of Fish & Wildlife, Habitat Resource Program

- Oregon Department of Fish & Wildlife, State Director
- Oregon Department of Fish & Wildlife, Threatened, Endangered, and Sensitive Species
- Oregon Department of Forestry, Insect and Disease Section
- Oregon Department of Land Conservation & Development, Coastal Zone Management Program
- Oregon Department of Parks & Recreation, Director and State Offices
- Oregon Department of Parks & Recreation, Heritage Program
- Oregon Department of Parks & Recreation, South Coast District
- Oregon Department of State Lands
- Oregon Department of State Lands, Wetland Conservation and Planning
- Oregon Department of Transportation, Region 3
- Oregon Energy Facilities Siting Council
- Oregon State University Extension, Coos County
- Oregon Public Utility Commission
- State of Oregon Representatives and Senators for districts encompassing the project area

5.4. TRIBES

The following Native American tribes were contacted:

- Confederated Tribes of Grand Ronde Community
- Confederated Tribes of Siletz Indians
- Coquille Indian Tribe
- Cow Creek Band of Umpqua Tribe of Indians
- Klamath Indian Tribe
- Smith River Rancheria

5.5. LOCAL GOVERNMENT

The following local governments and representatives were contacted:

- City of Bandon, Mayor, City Council, City Manager, City Planner
- City of Port Orford; Mayor, City Administrator, City Council, Planning Commission, City Liaisons
- Coos County, Assessor, Board of Commissioners, Planning Department, Department of Forestry,
- Coos County, Department of Parks & Recreation
- Coos County, Planning Department
- Coos County, Soil and Water Conservation District
- Coos County Weed Control Advisory Board
- Curry County, Assessor, Board of Commissioners, Public Services Division, Department of Roads
- Curry County, Planning Department
- Curry County, Public Services
- Curry County, Soil and Water Conservation District

- Curry County, Weed Control Program
- Sixes Cooperative Weed Management Area

5.6. UTILITIES

The following utilities were contacted:

- City of Bandon
- Coos Curry Electric Coop Inc.

5.7. LIBRARIES

The following libraries were contacted:

- Coos Bay Public Library
- Langlois Public Library
- Oregon Institute of Technology, Library
- Port Orford Library Foundation
- University of Oregon, Knight Library

5.8. MEDIA

The following media were contacted:

- Curry Coastal Pilot
- *The World* Coos Bay

5.9. NONPROFIT GROUPS AND OTHER ORGANIZATIONS

The following nonprofit groups and other organizations were contacted:

- Bandon Historical Society
- Cape Arago Audubon Society
- Coos Watershed Association
- Curry Historical Society
- Friends of Elk River
- HDR Engineering
- Kalmiopsis Audubon Society
- Port Orford & North Curry Chamber of Commerce
- South Coast Watershed Council

5.10. LANDOWNERS AND TRUSTEES IN THE PROJECT AREA

The following landowners and trustees in the project area were contacted:

A & L Trust
APCO Curry Properties
Ray and Jean Adams
Phil Adams, Oregon Land & Timber
Joseph Q. Addair
Al Pierce Lumber Company

Allen Family Revocable Living Trust
Bonnie Allen Estate
David Allen
Donald E. and Judy K. Allen
Llyla Allen
Vincent M. Amato
Ira H. Anderson, Jr.
Sandra M. Anderson
Kathryn F. Anthony
Steven, George, et al. Arnold
Barry and Sheila Austin
Stanley F. and Helen T. Avery
Gabriel Azevedo
Janet G. Azevedo
Trevon Babcock
Jamie Pers Rep Baier
Baja Humbug Oregon LTD
Billy and Jean P. Baker
John W. Balderson
Ball Family Trust
Bandon Crossings Golf Course LLC
Bandon Family LLC
Bandon Land Corporation
Bandon Supply Corp.
Barbara J. Peters Family LLC
Dorothy E. Barr,
Gordon W. Barteau
Eugene and Marilyn Baumann
Regan L. Bayless
James V. and Jacquelyn B. Beal
Walter Belden
C. Ross Bell
Peggy Bell
Reba Bellet
Ronald Bement
William R and Sarah R. Bien
Rocker and Katherine Big Joe
Frederick S. Bitgood
Evelyn G. Bjerg
Blue Heron Land Company
Frances A. Bodfield
Phyllis C. Bohrer
Michael Bohusz
Gregory Boice
Marianne Boice
Norman C. and Linda R. Bolduc
David Boses
James B. Boyd
Jill R. Boyd
Randall and Lisa Boyd
Mary Boyle
Michael A. and Meghan R. Brace
Bradford M. Gordon Living Trust
Troy Bradley
Jessie Bradley
Debra K. Braun
Carl A. and Aleea J. Brewer
Kenneth D. and Stephanie S. Brewer
Scott and Karen Briggs
Albert W. Britton, Jr. Estate
Kevin Brose
Jason Broussard
Curtis H. and Patricia M. Brown
James C. Brown
Joshua T. Brown
Joycelyn D. Brown
Robert B. Brown
Kathleen A. Brown
Robert Brunner
Diane Brunner
Hunter and J.K. Buettner
Nancy Buffington
Nancy Elizabeth Buffington
Clifford and Sharon Burgess
James and Kristina Burgett
James R. and Gayle K. Burgett
Christian Bussmann
Deana M. Bussmann
Ernest A. Bussmann
Wayne E. and Christy S. Butler
Wayne E. Butler
C & S Waterman Ranch LLC
Alford L. Caillouette
Betty M. Caillouette
Joseph T. Camara
Lynn E. Cannon
Rose M. Cannon
Cheryl A. Capes
Timothy B. Card
George and Darlyne Cardas
Carl A. McLeod Trust
Christopher Carey

Brenda L. Carey
Dennis R. and Cora A. Carpenter
Eric V. and Tracy Ann Carter
Lynn Cary
Rena Cary
Casey Family Trust
Michael F. Cavanaugh
Cedar Bend Golf Association Inc.
George C. Chappell
Steve L. and Kathryn F. Chassereau
E.N. Jensen Christen Living Trust
Bonny Christensen
Desiree Christensen
Hardy Christensen
Harold Christensen
Rosemary Christensen
William N. Christensen
City of Bandon
Dawn E. Clark
Charles Lee Clarke
Ronald G. Clayton
Leonard Cline
Martha Cline
Coast Hills Ranch LTD
Elmer L. and Darlene D. Conrad
Clifford Conradi
Joseph E. Cooney
Mary M. Cooney
Coos Curry Electric Coop Inc.
~~Coquille Indian Tribe~~
Benny R. Cordova
Roxanna K. Cordova
Mary Corey
Robert M. and Cynthia L. Costa
Lois M.A. Cotteleer
Beth A. Coughlin
Coventry Farms LLC
Bonnie Cox
Jerry Cox
Cheryl Coyle
Fred W. Coyle
CPM Development Corporation
Robert A. Craig
Roger A. Cram
Michael D. Crane
Crook Forest Products LLC
Orman Dean Crouse
Clella Crouse
Jeff A. Crow
James P. Crumley
Thomas D. Cunningham
Curry County
Martin P. and Paula J. Curtis
Edna Curtiss
Larry W. Curtiss
Lee Curtiss
Lon Custer
Cyday Timberlands
Kenneth Dalton
Bernadette Dalton
Robert J. Dark
Carol E. Dark
Shane Daugherty
Roland and Charlene Davenport
Daniel E. Davis
Celia V. Davis
Henry L. Davis Jr
Rebecca L. Davis
Donald W. and Elizabeth A. Davison
Michael K. Deering
Keith R. and Diana L. Delong
Dew Valley Community Club
Nora Dickson
Jeffrey D. Digby
Vincent Dluge
Jon C. and Melanie A. Dodson
John M. Donaldson
Patricia A. Donaldson
Robert A. Donaldson
Doris R. Sparks Trust
Samuel J. and Doris F. Doss
James C. Dougherty
Janet L. Dougherty
Paul and Frieda Douglas
Barbara A. Drake
Richard and Anna M. Drinnon
Ronald T. Dugan
Debra E. Dugan
D. Duncombe Jr.
Brenda Duncombe
Cheryle R. Dysart
Jerry and Debra Earls

East Bills Creek Road Trust
Doug Minton Edison
Edson Creek Rock Products
Ned B. and Susan M. Egen
Timothy W. Egger
Gary G. and Cindy Ekker
Mary Ellingson
Robert and Ruth Elliott
Teresa L. Elliott
Andrew Ells
Jennifer Ells
Jerry W. and Teresa L. Engdahl
Peter H. and Nicole A. Erenfeld
Eugene and Anne Sobbota Trust
Ronald E. and Mary T. Evans
R. Wayne Everest
Bonnie K. Everest
Scott Faber
Wesley L. Feeler
Wesley L. Feeler Jr.
Daniel Fenger
Ramiro D. and Tamara L. Ferrer
Manuel and Valerie Figueiredo
Mark G. Flake
Fletcher Family Trust
John L. Forty
Gerald G. Forty
Terry Forty
Ellis F. Foster
Farrell C. and Janice D.L. Fox
Russell S. ~~Fraser~~ and Patti R. Fraser
~~Patti R. Fraser~~
Kenneth H. Frost
Fugate Farms LLC
Lotte Elise Gadak
Penny D. Gagliano
James D. Gagnon
Lisa G. Gagnon
Richard F. Gagnon
Clarence and Kristina Gandy
Marian Gant
Steve Gant
Tom Gant
Vincent C. and Michelle S. Garcia
Lawrence W. and Joyce A. Gerber
Frederic G. Gernandt
Vicki L. Gernandt
Russell Albert Gibson III
Kathy V. Giddens
Nancy J. Gilbert
Darnell Giles
Edward Gilman
M. Gilman
Kerry and Caroline Goard
Thomas B. Goss
Gerald G. and Lois Grable
Jacqueline Greenleaf
John Gross
John and Rita Guice
John G. Gulia
Maria M. Gulia
Russell A. and Claire M. Gunther
John T. and Mary P. Guynup
Ralph N. and Sherry Haak
Helen E. Haffner
Alan A. Haga
John E. and Rhonda L. Haga
Marilyn R. Haga
Haga Family Trust
Richard B. and Barbara J. Hall
Hardin Business Properties LLC
Larry C. and Joyce D. Hardin
Charles E. and Patricia A. Harris
Joseph M. Harrison
Betty R. Hart
Garth and Beverly Hart
Michael P. Harty
Georgeann Harty
Harbor Construction LTD
Tom and Lori Hawkins
Mary A. Hampton Hebert
James Hegland
Catherine D. Henderson
Beverly C. Hendrix
Henriques Revocable Living Trust
Beatrice M. Hensley
~~Mary A. Hampton Hebert~~
Harold D. and Kathy R. Herlong
Jerry D. Hettenbach
Bonnie P. Hettenbach
Highway 42 South Land Trust
Jerry L. Hillman

Loretta B. Hillman
David Hoenie
Stuart A. Hoggatt
Ervin Holland
Ralph Hopkins Sr.
Miles W. Hopson
Mark Hoye
Richard and Dorothy Hubbard
~~Elizabeth Hutton~~
Thomas J. and Elizabeth A. Hutton
Frank Igaz
Herbert R. Inks
Lillian Inks
J & M Coast LLC
Paul A. Jackson
~~James P. Crumley Construction~~
Madelyn D. Jackson
Stephen Jackson
James H. Steele Trust
James P. Crumley Construction
Pamela G. James
Terrell D. and Mary James
Alfred C. Jarvis
Jennifer A. Jennings
Judy L. Jensen
Wilbur L. Jensen
Julia B. Johns
Bruce A. and Pamela E. Johnson
Johnston-Corson Investments LLC
JT Living Trust
Ronald F. and Judy L. Kasper
Kathryn S. Jensen Rev. Trust
Janet W. Keenlyside
Martha K. Keller
Michael P. Keller
David E. and Deborah M. Kelly
Mary T. Kemp
Steven L. Kidwell
John D. Kight
Rox Ann G. Kight
Karen Kirby
Kirchner Family Trust
Klamath First Federal Savings & Loan
Robert S. Koro
Robert E. Korthals
Wayne Krieger
Colleen Krieger
Shala McKenzie Kudlac
Grant Kudlac
Harlan Laffey
Karl F Lagace
Margaret A Lagace
Ernest B. Lamb
Patricia H. Lamb
Earl A. Lang
Lewis E. Lang
Merri L. Lang
William Lansing
Laramie Fealty LLC
Stella L. Larson
Patrick Laudel
Laurel Creek Acres LLC
Michael R. and Larita R. Lawson
Richard J. and Pamela A. Leclair, Jr.
Alan Richard Lee
Mary Largess Lee
Martin Leff
David H. Leister, III
Pauline V. Lenox
Linda L. Leonard
Phillip N. Leuthy
Diana L. Leuthy
Larry L. Levrets
Leo Lewandowski
Richard J. Liles
Betty J. Liles
David K. Lind
Deneille Lind
Lindsay Family Trust
Deidrie Lindsey
Mary A. Longworth
Karen L. Lowe
Patrick A. Lowe
Dawna J. Lund
Kenneth W. Lund II
Darrell W. and Diana M. Lyell
Thomas C. and Megan O. Lynch
Lynn A. Davies Separate Property Trust
M & T Crook Timberlands LLC
Robert E. MacIntyre
Denise F. MacIntyre
Allison Marie MacLaurie

Robert E. and Cynthia L. MacWhorter
Dennis L. and Josefa Maley
Thomas D. Mallory
Beverley Ann Manes
Raymond E. and Linda R. Marchand
Margaret Ann Karl Trust
Arval D. Marple
Blaine Marsh
Joseph Brian Marsh
N. B. Marsh
Martha G. Sexton Revocable Trust
Robert B. Matson
James W. and Eileen I. Maupin
Dolores A. Mayea
Barbara S. McCoon
Richard L. McGee
McKenzie Floras Creek Timberlands LLC
Roderick A. McKenzie
Ruth C. McKibben
Michael McKinney
Phyllis Ann McLeod
McMahon Family Trust
John L. McMahon
Clifford R. McNamara
Beverly V. McNamara
David B. McNeeley
Darlene B. McNeeley
David McNulty
J.A. Mellott
Menasha Development Corporation
Matthijs Pieter Mijs
Jon D. Mikels
Charles L. Miller
Susan M. Miller
Kathryn K. Millikin
S. Minton
Dyrrel Mock
K. Terrance Mock
Bill and Louise C. Moore
Ellen L. Moore
Leon L. Moore
Wilbur C. and Ellen L. Moore
Moore Mill & Lumber Company
Jack P. Morgan
John H. Morrill
Marilyn K. Murphy
Murphy Family Trust
Myrtle Bend Inc.
Jerold L. Nagel
Renne and Janice Nason
Steve and Cathy Needleman
Nelson Family Living Trust
Christopher S. Nevitt
Susan Mary Nichols
Lance V. Nix
Judith A. Nix
John R. and Audre R. Nowlin
Thomas E. and Joyce O. Nunley
Eric Thomas and Marilyn Leigh Oberbeck
Patrick M. Oday
Judith N. Oday
John and Susan Ohanesian
Susan J. Ohanesian
William A. and Judy A. Ohlsen
Harvey C. Olson
Linda D. Olson
Pacific Management Institute
Charles W. and Idell L. Panter
Jonathan M. Parker
Larry Parmenter
Kevin D. Paulson
Randolph D. Pearce
Edward and Elaine Pendleton
Kelly M. and Jean K. Perkins
~~Jean K. Perkins~~
Patrick S. Perkins
Marvin M. and Nancy Peters
Whitney Peters
Allen J. and Sherry L. Petersen
Shelly Pierson
Joshua N. Pittman
Sara Lynn Polensky
Jon M. and Lorenna O. Porter
Joann Powell
Mary Ann Powell
Anna K. Powers
Denisa Powers
J. Todd Powers
Ronald A. Powers
Cindylou Prince
Oren L. and Barbara J. Pruitt
Ronald Puhl

Mary A Puhl
Emily Purdy
Richard E. Purdy
R & B Waterman Ranch
Jo~~h~~n Rand
Michelle Rand
Steven Rankin
Jennifer Rankin
Ransdell Loving Trust
Curtis W. Reader
Hermenia R. Reader
Patricia A. Reese
John P. and Judith A. Reslock
Arlen Rexius
Patrick M. Richards
Bruce M. and Kathy A. Richardson
Marie and Sandra Richmond
Barbara Richter
Stephen E. Rietmann
Janet C. Rietmann
Megan M. and Waylon L. Riffle
Robert and Judith Reid Trust
Robert J. and Judith A. Reid Trust
Robert and Martha George Family Trust
Peggy Janice Roberts
Richard D. Robertson
Deborah C. Robertson
Floyd V. and Janet E. Robinson
Delmer C. Robison
Juanita and Daren Robison
Susan M. Robison
Robison Loving Trust
Dale R. Robson
Roderick and Linda Fraser Trust
Linda Fraser Roderick
Robert S. and Gloria L. Rodgers
Rolando Rodriguez
Roger and Marguerite Coast Trust
Thomas James Roger
Patricia Ann Roger
Rogue River Cemetery Maintenance District
Rogue Wilderness Prospect Inc
Roseburg Resources Company
Ronald Pat Ross
Catherine A. Ross
David Rossi
Amy Rossi
Michael E. and Angela M. Rupe
Thomas Bernard Ruth
John and Jule A. Rutherford II
Curtis E. and Ann M. Ryan
Gregory T. and Statia E. Ryder
Robin Ann Sage
Karsten J. Salin
Yiena L. Salin
Sam Fernandez Trust
Paul Schallert
Stephen N. and Karen D. Scheinman
Robert M. Schellong
Albert F. Schmidt
Sharron D. Schmidt
Jason Schomaker
Michael and Jennifer Schulz
School District 2CJ
Edmond M. and Lorene P. Scribner
Linda L. Sessions
Nicholas Shammot
Kevin M. Shaw
Dan and Debra J. Sigvartsen
Owen B. Skeie II
Junedah M. Skeie
Linden Skoog
Warren and Holly Slater
~~Holly Slater~~
Keith J. Slaughter
Billie Marie Smith
Carla Smith
Clinton L. Smith
Donald E. Smith
Dorothy J. Smith
Evelyn Mae Smith
Floyd D. Smith
Herbert A. Smith
Jack L. Smith
Jimmy L. Smith
Kenneth R Smith
Linda Smith
Rex D. and Carla C. Smith
Sandra Dehart Smith
Venus C. Smith
Robert C. and Anne F. Smykal
South Coast Lumber Company

Sparks Trust
Linda G. Spencer
Michael Stack
Rhonda Stack
Stadelman Living Trust
Daniel J. Stadelman
Sarah Stadelman
Elizabeth A. Stadler
Richard A. Standiford
Lisa D. Standiford
Irma J. Starkweather
Paul B. Starkweather
State of Oregon Department of Parks & Recreation
James S. Steece
Ernest Steelman
Ernest W. and Jeane M. Steelman
Ryan C. Steen
Paul A. and Connie Stephan
Theodore H. Stethem
William C. Stetson
Mike and Marita Stockford
Stonecypher Ranch Inc.
Bonita F. Stout
David J. Stout Jr.
David J. and~~&~~ Veronica Stout
Tom R. and Kathleen M. Streets
Willard and Lorene B. Streets
Daniel A. Sullivan
Glen Allen and Jessie E. Swafford
Marsha A. Swanson
Lucy M. Swartz
David E. Sweet
Michelle C. Sweet
Robert K. Sweet
Scott Piercy Sweet
Thomas H. Sweet
Kenneth and Pamela Tams
Judith D. Taylor
Gary K. Templeton
Gordon J. and Ann M. Texley
William A. and Marjorie Thaanum, Jr.
The Liquor and Cigar Store LLC
Theodor and Mary Vered Living Trust 1998
Steve and Jane Thiessen
Thomas M. and Sharie V. Thompson
Arlon and Catherine Thornesberry
Tiga International Limited
Timberlands LLC
Douglas M. and Julianne R. Tipton
Brenda Tison
Daniel and Cindy Tobiska
Arnold R. Todd
Jeanette M. Todd
Julie L. Todd
Vernon E. Todd
Kevin F. and Debra L. Treinen
Trico Private Trust
Trinity Ridge Enterprises, Inc
Frank W. Tucker
William Tuomey
Barbara A. Turner
Erik Turner
Ulett Enterprises, Inc.
Wesley W. and Garrie C. Ulrey
Umpqua Bank
Stephen C. and Catherine L. Underdown
Susan Van Kirk
Wiley Vanburen
Vannucci Bandon Properties LLC
Gordon P. Vaughn
Suzanne M. Vaughn
Edith P. Vierck
Scott R. Vierck
Edward J. Wade III
Allan K. Wagner
Cristopher R. Wagner
Deeta Jean Wagner
Glen L. and Bonnie Wagner
Mary J. Wagner
Paul Brice Wagner
Shannon J. Wagner
Mary Wahl
Wahl Ranches & Company
Beverly Walters
Robert Walters
Ronald P. and Sandra Jo Wampach
Charlie Waterman
Sharon Waterman
Juanita M. Watson
Roy Weatherman
Bob and Mary E. Webb

Paul R. and Janice L. Weber
Cecilia Weeks
William A. and Georgia L. Weinblatt
David and Melode A. Weiner
~~Melode A. Weiner~~
George and Deneise Welch
George K. Welch
Lawrence R. Welch
Michael L. Welch
Ike Sherman Wells
Nancy Anne Wells
Laurel Wesselink
Paul Wesselink
David G. and Dorothy B. White
Brian Whitney
Gene M. Whitsett
Gary M. and Cheryl L. Wickham
David W. and Amy E. Wilhite
Dennis L. Will
Reva S. Will
Carlene J.E. Williams
Esther W. Williams
Wilson Operations, Inc.
Charles F. Wilson
Deborah J. Wilson
Deborah Jean Baklenko Wilson
John F. Wilson
Larry A. and Paula R. Wing
Chere R. Winters
Stacy P. Winters
Michael Woo
Woodland Management Inc., Gods Valley Timber Company
Yamaha Motor Corporation
Eva Yong
Jane D. Ziegler
David J. Zuber
Marvin C. Zuber
Roxan L. Zuber
Sharon E. Zuber

This page left intentionally blank.

Chapter 6
Glossary

100-year floodplain – An area that has a 1% chance of being flooded in a given year; designated by the Federal Emergency Management Agency. (See definition of floodplain.)

Access road – A road or road spur that provides access to the transmission line corridor and structure sites during construction and operation and maintenance.

Ambient noise – Background noise generated by existing noise sources present in the surrounding area.

Aquifer – An underground bed or layer of permeable rock, sediment, or soil that yields water.

A-weighted decibel (dBA) – A logarithmic unit of sound measurement based on an A-weighted scale commonly used for measuring environmental and industrial noise levels.

Best management practice – A practice that is the most effective and practical means of preventing or reducing the amount of pollution generated by non-point sources to a level compatible with water quality goals; these practices also benefit other resources by reducing construction disturbance areas.

Capacity – A measure of the ability of a transmission line, groups of lines (path), or transmission system to carry electricity.

Carbon monoxide (CO) – A colorless, odorless, poisonous gas produced when carbon burns with insufficient air.

Conductor – The wire cable strung along a transmission line through which electricity flows.

Corona – An electrical field appearing around the surface of a conductor, insulator, or hardware caused by ionization of the surrounding air.

Counterpoise – A system of underground wires that are attached to certain structures for additional lightning protection.

Cultural resources – Historic, archaeological, or paleontological resources, including properties of traditional and cultural significance, sacred sites, Native American human remains, and associated objects, which are entitled to special consideration under federal statute, regulations, and executive orders.

Culvert – A metal or concrete pipe used to carry or divert runoff water from a drainage such as a ditch or stream; usually installed under roads to prevent washouts and erosion.

Cumulative impacts – The impact on the environment which results from the incremental impact of the action when added to the past, present, and reasonably foreseeable future actions, regardless of who undertakes such actions.

Current – The flow of an electrical charge through the transmission line conductor (as compared to voltage, which is the force that drives the electrical charge).

Dampers – A device mounted in structures to reduce the amplitude of mechanical vibrations.

Danger tree – Any tree located outside of the acquired transmission line right-of-way, which is a present or future hazard to the transmission line because it could fall into, bend into, grow into, or with high winds, swing into the conductor or come close enough to cause a "flashover" of current from the conductor.

Decibel – A logarithmic unit of measurement that expresses the magnitude of a physical quantity, such as power or intensity, relative to a reference level widely known as a measure of sound pressure level.

Easement – A grant of the right to use land in a manner granted under a formal agreement between two parties. BPA acquires easements for transmission lines and access roads to obtain the right to use the land for access, construction and improvements, and operation and maintenance of its transmission lines.

Electromagnetic field (EMF) – The physical area produced around the electric wire or conductor when electric transmission is occurring.

Electromagnetic interference (EMI) – Interference of an electrical device caused by the presence of an electromagnetic field.

Floodplain – That portion of a river valley adjacent to the stream channel that is covered with water when the stream overflows its banks during flood stage.

Ford – A shallow place in a body of water, such as a river, where one can cross by walking or riding an animal or vehicle.

Greenhouse gas (GHG) – Gas in the environment that absorbs and emits radiation within the thermal infrared range.

Guy wire – A tensioned cable designed to add stability to structures.

Guy wire anchor – An underground structure that serves as a foundation of support for the system of wires that supports a structure.

Hard line – A strong wire that is used to pull the conductor through a structure when the transmission line is being installed.

Insulators – A component of the transmission line structure made of non-conducting material, such as ceramic, that connects the conductor to the suspension structure and prevents the transmission of electrical current from the conductor to the ground.

Integrity – The quality of a resource such that the location, setting, design, materials, workmanship, feeling, and association are retained.

Kilovolt (kV) – One thousand volts.

Landslide – The movement of surface soil down a steep slope.

Lattice steel structure – A type of transmission tower constructed of multiple steel bars or poles connected together to make the frame.

Low-income population – A portion of the population that is below the poverty line that could be disproportionately disadvantaged because of limited financial resources.

Minority population – Any readily identifiable group of minority persons who will be similarly affected by a proposed program, policy, or activity. A minority population is considered to be present if the minority population percentage of the affected area is greater than the minority population percentage in the general population or other appropriate unit of geographic analysis.

Mitigation – Steps or measures taken to lessen the potential effects on a resource predicted as the result of an action; mitigation could result in avoiding the impact completely, reducing the impact, or compensating for the impact.

Multiplier effects – The total increase in income and employment that occurs in the local economy for each dollar of local project expenditure.

Nonattainment – The status of an air basin when it is not in compliance with applicable air quality standards for a specific pollutant.

Noxious weeds – Plants that are injurious to public health, crops, livestock, land or other property, as identified by state law.

Outage – An event caused by a disturbance on the electrical system that requires BPA to remove a piece of equipment or a portion or all of a line from service. The disturbance can be the result of a natural or human cause.

Overhead ground wire – A wire attached to the top of certain structures to route electricity from lightning to the ground through the structure, preventing damage to the electrical equipment in the substations.

Ozone – A form of oxygen produced when an electric spark or ultraviolet light passes through air or oxygen.

Perennial – Refers to a stream or creek with continuous, year-round water flow; under the state water typing system perennial streams include Types 1 through 4. When this term refers to plants, it means species that live for several years.

Pulling site – A staging area located at the beginning of a segment along the transmission line where equipment (i.e., a puller) is set up and used to pull the conductor through the transmission line.

Right-of-way – An easement for a certain purpose over the land of another, such as a strip of land used for a road, electric transmission line, or pipeline.

Riparian – Pertaining to, living on, or situated on the banks of rivers and streams.

Sheet erosion – The removal of a uniform, thin layer of soil by raindrops or water runoff on bare soil.

Sock line – A line used to install the conductor through a structure. The sock line is used to pull the hard line through the transmission line, which is then used to pull the conductor through.

Staging area – The area cleared and used by BPA or BPA's contractor to store and assemble materials or structures immediately before and during construction.

Structure – A type of support used to hold up transmission or substation equipment.

Structure cross arms – Supporting features on a structure.

Take – Section 3 of the federal Endangered Species Act defines take as an act on a listed species with the following effect: "to harass, harm, pursue, hunt, shoot, wound, trap, capture, collect or attempt to engage in any such conduct." USFWS further defines "harm" as "significant habitat modification or degradation that results in death or injury to listed species by significantly impairing behavior patterns such as breeding, feeding, or sheltering," and "harass" as "actions that create the likelihood of injury to listed species to such an extent as to significantly disrupt normal behavior patterns which include, but are not limited to breeding, feeding or sheltering."

Tensioning site – A staging area located at the end of a segment along the transmission line, where equipment (i.e., a tensioner) is set up and used to tighten the conductor along the transmission line.

Threatened species – A species officially designated by USFWS that is likely to become endangered within the foreseeable future throughout all or a significant portion of its range; states also designate threatened species.

Traditional Cultural Property (TCP) – A property identified by an existing community as being important to that community's historical and current identity and traditional knowledge and culture.

Turbidity – A measure of the amount of particulate matter, such as suspended sediment, per unit volume of water.

Watershed – A drainage basin defined by an elevated boundary area separating tributaries draining into different river systems.

Wetland – An area where anaerobic conditions (lack of oxygen) develop in the soil because of prolonged saturation or inundation by water during the growing season. Indicators of wetlands include plant species adapted to such conditions, characteristic soil colors and chemical properties, and physical evidence of flooding or waterlogged soils.

Wetland buffer – The area surrounding a wetland that performs important functions for wetlands, such as filtering sediment and other potential contaminants from water before it enters the wetland.

Chapter 7
References

7.1. WRITTEN REFERENCES

Arhangelsky, K. 2009. *Bandon-Rogue Transmission Corridor Rebuild Project Threatened and Endangered Plant Survey Summary Report*. Turnstone Environmental Consultants, Portland, OR. 27 pp.

Bandon Crossings. 2010. Bandon Crossings Golf Course—Public Golf in Bandon, OR. Available: <http://bandoncrossings.com/homepage>. Accessed: June 26, 2010.

Bay Area Chamber of Commerce. 2010. Major Industries in Coos County. Available: <http://www.oregonsbayarea.org/business/coos-bay-north-bend-charleston-major-industries.htm>. Accessed: July 3, 2010.

Beaulaurier, D. L. 1981. *Mitigation of Bird Collisions with Transmission Lines*. Bonneville Power Administration, Portland, OR.

Beaulaurier, D. L., B. W. James, P. A. Jackson, J. R. Meyer, and J. M. Lee. 1982. Mitigating the incidence of bird collisions with transmission lines. Third Symposium on Environemental Concerns in ROW Management. San Diego, CA.

Beck, K. 2010. *Bandon-Rogue Transmission Corridor Rebuild Project Access Road Improvement Threatened and Endangered Plant Survey*. Beck Botanical Services, Bellingham, WA.

Bonneville Power Administration. 2000a. *Transmission System Vegetation Management Program Environmental Impact Statement*. Available: <http://efw.bpa.gov/environmental_services/Document_Library/Vegetation_Management/FEIS0285.pdf>

———. 2000b. *Transmission System Vegetation Management Program Record of Decision*. Available: <http://www.bpa.gov/corporate/pubs/RODS/2000/efw/VegROD.pdf>

Cedar Bend Golf. 2010. Cedar Bend Golf Course—Gold Beach, OR. Available: <http://www.cedarbendgolf.com>. Accessed: June 26, 2010.

Cook, Kerry. 2010. *Geotechnical Field Trip Report*. Bandon-Rogue No. 1, Structure No. 34-2. Report date 7-19-2010.

Coos County. 2010. Zone Maps. Available: <http://www.co.coos.or.us/Planning/zone_maps/ZoneMaps_JPEG/>. Accessed: June 22, 2010.

Curry County. 2010. Curry County Enterprise GIS. Available: <http://gis.co.curry.or.us/gis/>. Accessed: June 26, 2010.

———. ~~2000~~2009. *Comprehensive Plan Update*. Department of Public Services, Courthouse Annex, Gold Beach, OR.

Dott, R. H., Jr. 1971. *Geology of the Southwestern Oregon Coast West of the 124th Meridian*. Oregon Department of Geology and Mineral Industries Bulletin 69.

Ecological Society of America (Content Partner), Jan-Peter Mund (Topic Editor). 2008. Soil carbon sequestration fact sheet. In C. J. Cleveland (ed.), *Encyclopedia of Earth*. Available: <http://www.eoearth.org/article/Soil_carbon_sequestration_fact_sheet>. Accessed: July 20, 2010. Washington, D.C.: Environmental Information Coalition, National Council for Science and the Environment.

Faanes, C. A. 1987. *Bird Behavior and Mortality in Relation to Power Lines in Prairie Habitats*. U.S. Fish and Wildlife Service. Fish and Wildlife Technical Report 7.

Federal Transit Authority. 2006. *Transit Noise and Vibration Impact Assessment*. (DOT-T-95-16.) Prepared for Federal Transit Authority Office of Planning, Washington, D.C., by Harris, Miller, Miller & Hanson, Inc., Burlington, MA.

Finley, Aimee A. 2010. *Documentation of Aboveground Resources for the BPA's Bandon-Rogue No. 1 Transmission Line Rebuild Project, Coos and Curry Counties, Oregon*. October 29. Prepared for the Bonneville Power Administration, Portland, OR, by Applied Archaeological Research, Inc., Portland, OR.

Franklin, Jerry F. and C. T. Dyrness. 1988. *Natural Vegetation of Oregon and Washington*. Corvallis, OR: Oregon State University Press.

Gauger, J. R. 1985. *Household Appliance Magnetic Field Survey*. IEEE PAS-104, No.9:2436-244.

Houghton, R. 2010. Understanding the Carbon Cycle. Available: <http://www.whrc.org/carbon/index.htm>. Accessed: January 29, 2010. The Woods Hole Research Center.

Intergovernmental Panel on Climate Change (IPCC). 2006. *2006 IPCC Guidelines for National Greenhouse Gas Inventories*. Volume 4. Prepared by the National Greenhouse Gas Inventories Programme: Eggleston H. S., L. Buendia, K. Miwa, T. Ngara, and K. Tanabe (eds.). Japan: Institute for Global Environmental Strategies.

James, B. W. and B. A. Haak. 1979. *Factors Affecting Avian Flight Behavior and Collision Mortality at Transmission Lines*. Final Report. Bonneville Power Administration, Portland, OR.

Kessavalou, X. 1998. Greenhouse gas fluxes following tillage and wetting in a wheat-fallow cropping system. *Journal of Environmental Quality* 27:1105–1116.

Kramer, George. 2010. *Bonneville Power Administration Transmission System National Register Multiple Property Submittal (Draft)*. Prepared for the Bonneville Power Administration, Portland, OR.

———. 2009. *Corridors of Power: The Bonneville Power Administration Transmission Network Historic Context Statement (Draft)*. Prepared for the Bonneville Power Administration, Portland, OR.

McCormick, Erica D., Aimee A. Finley, and Bill. R. Roulette. 2010a. *Results of a Literature Review for the BPA's Bandon-Rogue Transmission Line Rebuild Project, Coos and Curry Counties, Oregon*. August 6. Prepared for the Bonneville Power Administration, Portland, OR, by Applied Archaeological Research, Inc., Portland, OR.

———. 2010b. *Draft Cultural Resource Survey for the BPA's Bandon-Rogue Transmission Line Rebuild Project, Coos and Curry Counties, Oregon*. Prepared for the Bonneville Power Administration, Portland, OR, by Applied Archaeological Research, Inc., Portland, OR.

Meyer, J. R. 1978. *Effects of Transmission Lines on Bird Flight Behavior and Collision Mortality*. Bonneville Power Administration, Engineering and Construction Division, Portland, OR.

Miller, D. A. 1974. Electrical and magnetic fields produced by commercial power systems. Pages 62–70 in Llaurado, J. G. et al. (ed.), *Biological and Clinical Effects of Low-Frequency Magnetic and Electric Fields*. Charles C. Thomas, Springfield, IL. 345 pp.

Minnesota IMPLAN Group. 2007. IMPLAN professional 2.0. Impact Modeling Solutions. Stillwater, MN.

National Institute of Environmental Health. *2002. EMF Electric and Magnetic Fields Associated with the Use of Electric Power: Questions and Answers*. Research Triangle Park, NC: National Institute of Environmental Health Sciences of the U.S. National Institutes of Health.

———. 1999. *Health Effects from Exposure to Powerline Frequency Electric and Magnetic Fields*. NIH Publication No. 99-4493. National Institute of Environmental Health Sciences of the U.S. National Institutes of Health, Research Triangle Park, NC.

———. 1998. *Assessment of Health Effects from Exposure to Powerline Frequency Electric and Magnetic Fields: Working Group Report*. NIH Publication No. 98-3981. National Institute of Environmental Health Sciences of the U.S. National Institutes of Health, Research Triangle Park, NC.

National Marine Fisheries Service. 2010. Endangered Species Act Status of West Coast Salmon and Steelhead. NMFS Northwest Region. Updated July 1, 2009. Available: <http://www.nwr.noaa.gov/ESA-Salmon-Listings/upload/snapshot-7-09.pdf>. Accessed: November 18, 2010.

———. 2008. *Anadromous Salmonid Passage Facility Design*. Northwest Region, Portland, OR.

National Scenic Byways Program. 2010. Pacific Coast Scenic Byway. Available: <http://www.byways.org/explore/byways/2143/>. Accessed: June 28, 2010.

Olendorff, R. R. and R. N. Lehman. 1986. *Raptor Collision with Utility Lines: An Analysis Using Subjective Field Observations*. Pacific Gas and Electric Company. San Ramon, CA.

Oregon Department of Agriculture. 2010. *Noxious Weed Policy and Classification System 2010*. Oregon Department of Agriculture Noxious Weed Control Program, Salem, OR. Available: <http://www.oregon.gov/ODA/PLANT/WEEDS/docs/weed_policy.pdf?ga=t>.

Oregon Department of Environmental Quality. 2010a. *Oregon's 2004/2006 Integrated Report Database*. Available: <http://www.deq.state.or.us/wq/assessment/rpt0406/search.asp#db>. Accessed: July 28, 2010.

———. 2010b. Air Quality Maintenance and Nonattainment Areas. Available: <http://www.deq.state.or.us/aq/planning/index.htm>. Accessed: June 28, 2010.

———. 2010c. Air Quality Monitoring Stations. Available: <http://www.deq.state.or.us/lab/aqm/stations/aqmStationMap.htm>. Accessed: June 28, 2010.

Oregon Department of Fish and Wildlife. 2004. *Fish Passage Criteria*. Salem, OR. 6pp.

Oregon Department of State Lands. 2004. *Just the Facts…Wetland Functions and Assessment*. Oregon Department of State Lands Wetland Program, Salem, OR.

Oregon Department of Transportation. 2010a. 2008 Oregon State Flow Map. Available: <http://www.oregon.gov/ODOT/TD/TDATA/tsm/tvt.shtml>. Accessed: June 18, 2010.

———. 2010b. Over-Dimension Operations. Available: <http://www.oregon.gov/ODOT/MCT/OD.shtml>. Accessed: June 18, 2010.

Oregon Employment Department. 2010. Oregon Labor Market Information System. Last revised: May 2010. Available: <http://www.olmis.org/olmisj/CES>. Accessed: July 3, 2010.

Oregon Global Warming Commission. 2010. Keep Oregon Cool. ~~Database records of known special status species locations~~Roadmap 2020. Available: <http://www.keeporegoncool.org/content/roadmap-2020~~www.keeporegoncool.org~~>. Accessed: July 16, 2010.

Oregon Housing and Community Services. 2006. *Report on Poverty 2006*. Available: <http://www.ohcs.oregon.gov/OHCS/docs/PovertyReport2006/Poverty_Report_Curry.pdf>. Accessed: July 3, 2010.

Oregon Natural Heritage Information Center. 2010. Oregon Natural Heritage Database.

———. 2009. Oregon Natural Heritage Database.

Oregon Parks and Recreation Department. 2010. Humbug Mountain State Park. Available: <http://www.oregonstateparks.org/images/pdf/humbug_full.pdf>. Accessed: June 26, 2010.

Oregon State University Extension Service. 2010a. Forestry: OSU Extension Service. Available: < http://extension.oregonstate.edu/coos/forestry>. Accessed: June 30, 2010.

———. 2010b. Cranberry Production in Coos and Curry Counties. Available: <http://extension.oregonstate.edu/coos/Hort/cranberry>. Accessed: June 30, 2010.

Pacific Fishery Management Council. 1999. *Amendment 14 to the Pacific Coast Salmon Plan*. Appendix A: Description and Identification of Essential Fish Habitat, Adverse Impacts and Recommended Conservation Measures for Salmon. March. Portland, OR.

Pound Hammer Media. 2009. Visit Oregon Coast—Welcome! Available: <http://www.visitoregonsouthcoast.com/>. Accessed: June 29, 2010.

Thalheimer, Erich. 2000. Construction noise control program and mitigation strategy at the Central Artery/Tunnel project. *Noise Control Engineering Journal* 48(5):157–165.

The Climate Registry. 2008. General Reporting Protocol Version 1.1.

Turnstone Environmental Consultants. 2011. *Biological Assessment for Bandon-Rogue Transmission Line Rebuild*. January. Portland, OR. Prepared for Bonneville Power Administration, Portland, OR.

———. 2010. *Wetland Delineation Report for the Proposed BPA Bandon Rogue Transmission Line Rebuild Project, Coos and Curry Counties, Oregon*. November. Portland, OR. Prepared for Bonneville Power Administration, Portland, OR.

———. 2009. *Bandon-Rogue Transmission Corridor Rebuild Project—BLM Sensitive Plant Survey Summary Report*. Portland, OR. 10 pp. Prepared for Bonneville Power Administration, Portland, OR.

U.S. Bureau of Land Management. 2010a. Edson Creek and Sixes River Recreation Sites. Available: <http://www.blm.gov/or/resources/recreation/files/brochures/EdisonCrkandSixesRiverBrochure.pdf>. Accessed: June 26, 2010.

———. 2010b. BPA Bandon-Rogue Transmission Line Rebuild Botanical Review for T & E, Survey and Manage, and special status Bureau sensitive vascular, lichen and bryophyte species. 2 pp.

U.S. Census Bureau. 2010. *General Population and Housing Characteristics; 1990-2009* [various counties/cities in Oregon]. Available: <http://factfinder.census.gov>. Accessed: June 21, 2010.

~~U.S. Census Bureau. 2010. State and County Quick Facts. Last revised: April 22, 2010. Available: <http://quickfacts.census.gov/qfd/states/41000.html>. Accessed: July 3, 2010.~~

U.S. Department of Energy and U.S. Fish and Wildlife Service. 2006. Memorandum of Understanding between United States Department of Energy and the United States Fish and Wildlife Service Regarding Implementation of Executive Order 13186, “Responsibilities of Federal Agencies to Protect Migratory Birds.”

U.S. Department of Health and Human Services. 2010. *The 2009 HHS Poverty Guidelines: One Version of the [U.A.] Federal Poverty Measure*. Last revised: April 16, 2010. Available: <http://aspe.hhs.gov/poverty/09poverty.shtml>. Accessed: July 3, 2010.

U.S. Energy Information Administration. 2009a. Energy and the Environment—Greenhouse Gases Basics. Available: <http://tonto.eia.doe.gov/energyexplained/index.cfm?page=environment_about_ghg>. Accessed: January 29, 2010.

———. 2009b. *Emissions of Greenhouse Gases Report*. DOE/EIA-0573(2008). Available: <http://www.eia.doe.gov/oiaf/1605/ggrpt/>. Accessed: July 19, 2010.

U.S. Environmental Protection Agency. 2010a. Climate Change—Science: Atmosphere Changes. Available: <http://www.epa.gov/climatechange/science/recentac.html>. Accessed: July 19, 2010.

———. 2010b. Climate Change—Regulatory Initiatives: Greenhouse Gas Reporting Program. Available: <http://www.epa.gov/climatechange/emissions/ghgrulemaking.html>. Accessed: July 19, 2010.

U.S. Fish and Wildlife Service. 2010. Species list. Available: <http://www.fws.gov/oregonfwo/Species/Lists>. Accessed: February 2010 and thereafter on a monthly basis.

———. 2007. *National Bald Eagle Management Guidelines*. May.

———. 1998. *Recovery Plan for the Endangered Western Lily* (Lilium occidentale). Portland, OR. 82 pp. Available: <http://ecos.fws.gov/docs/recovery_plans/1998/980331b.pdf>.

U.S. Forest Service and U.S. Bureau of Land Management. 2004. *Final Supplemental Environmental Impact Statement – Management of Port-Orford-Cedar in Southwest Oregon*. Available: <http://www.fs.fed.us/r6/rogue-siskiyou/projects/foresthealth/poc-seis.shtml>.

———. 2003. *Rangewide Assessment of Port-Orford-Cedar on Federal Lands*. Available: <www.fs.fed.us/r6/rogue-siskiyou/projects/foresthealth/poc/poc-range-wide-assess.pdf>.

Washington State Department of Ecology. 2010. Regional Haze. Available: <http://www.ecy.wa.gov/programs/air/globalwarm_RegHaze/regional_haze.html>. Accessed: January 11, 2010.

———. 2005. *Stormwater Management Manual for Western Washington*. Publication #05-10-029 to #05-10-033. February.

Whitehead, R. L. 1994. *Ground Water Atlas of the United States: Idaho, Oregon and Washington*. HA 730-H. U.S. Geological Survey. Denver, CO.

Williams, T. H., E. P. Bjorkstedt, W. G. Duffy, D. Hillemeier, G. Kautsky, T. E. Lisle, M. McCain, M. Rode, R. G. Szerlong, R. S. Schick, M. N. Goslin and A. Agrawal. 2006. *Historical Population Structure of Coho Salmon in the Southern Oregon/Northern California*

Evolutionarily Significant Unit. NOAA-TM-NMFS-SWFSC-390. NMFS, Southwest Fisheries Science Center, Santa Cruz, CA. 85 p.

7.2. PERSONAL COMMUNICATION

Betlejewski, Frank. Interregional Port-Orford-Cedar Program Manager. U.S. Forest Service, Central Point, OR. March 14, 2011—email.

Claire, Chris. Fish Biologist. Oregon Department of Fish and Wildlife, Charleston, OR. September 14, 2010—telephone call.

Collins, Sondra. Fisheries Biologist. National Marine Fisheries Service, Habitat Conservation Division, Roseburg, OR. September 14, 2010—telephone call.

Confer, Todd. Fish Biologist. Oregon Department of Fish and Wildlife, Gold Beach District. September 16, 2010—telephone call.

Cook, Kerry. Geotechnical Engineer. Bonneville Power Administration, Portland, OR. July 13 and 22 and August 31, 2010—email and telephone communication with James Wilder, ICF International, regarding regional soils and geology and geotechnical constraints.

Edwards, Curtis. Wildlife Biologist. Oregon Department of Fish and Wildlife, Port Orford, OR. February 25 and November 2, 2010—~~email with Turnstone Environmental~~meeting.

Love, Stuart. District Wildlife Biologist. Oregon Department of Fish and Wildlife, Charleston, OR. August 27, 2010—~~phone conversation~~email with Turnstone Environmental; April 19, 2011—phone conversation with Kimberley St. Hilaire, BPA Environmental Document Manager.

Maurice, Kevin J. Wildlife Biologist. U.S. Fish and Wildlife Service, Oregon State Office. November 16, 2010—email.

McWilliams, Michael. Forest Health Monitoring Specialist. Oregon Department of Forestry, Salem, OR. March 16, 2011—email.

Vileisas, A., President, Kalmiopsis Audubon Society, Port Orford, OR. October 27, 2010—phone conversation and email.

This page left intentionally blank.

Chapter 8
Public/Agency Comments and Responses

This chapter presents comments received on the Preliminary EA and BPA's responses to these comments. Comments were submitted in writing through letters, comment forms, and email, as well as by calling BPA's comment telephone line. A total of 17 comment submittals were received. Each comment submittal was given an identifying number that corresponds to the order in which the submittal was logged in to the official BPA comment file. Comment submittals were received from the following individuals, organizations, and agencies:

- BRPE10009: Jim Wick/Gods Valley Timber Company
- BRPE10012: Sharon and Franklin Waterman/Waterman Trust
- BRPE10013: Michael Murphy
- BRPE10014: Will Christensen
- BRPE 10015: Christopher W. Claire, Oregon Department of Fish and Wildlife
- BRPE10016: Michael and Marita Stockford
- BRPE10017: Charlie Waterman
- BRPE10018: Robert Donaldson
- BRPE10019: Robert L. George
- BRPE 10020: Leonard Cline
- BRPE10021: Mary Wahl/Wahl Ranch
- BRPE10022: Paul Stephan
- BRPE10023: Tristan D. Huff/Oregon State University Extension
- BRPE10024: Brenda Dumcomb
- BRPE10025: Jonathan Benjamin
- BRPE10026: Ned and Susan Egen
- BRPE10027: Richard McGee

Breaks in the number sequence reflect blank or erroneous submittals and submittals that did not include comments or that did not have content applicable to the Rebuild Project (such as SPAM, including advertisements and nonsensical numbers and letter sequences).

Each comment submittal is reproduced in its entirety in this chapter. Where a comment submittal included multiple comments, each of these comments was assigned a sequential number. Following each comment submittal are BPA's responses to the comments raised in the submittal.

As a result of reviewing and responding to the comments received, some changes were made in the Preliminary EA. These changes are presented as underlined and strike-out text in the Final EA. In addition, the Mitigation Action Plan (Appendix J) has been finalized and is included in the Final EA. Because this chapter is entirely new, it is presented free of strike outs and underlines.

BRPE10009
Jim Wick,
Gods Valley Timber Co.

BONNEVILLE POWER ADMINISTF

Proposed Bandon-Rogue Transmission Line Rebuild Project

Does the preliminary EA analyze the resources important to you?

As long as The Rd Way clearing is not enlarged or moved we have no problems

Are there other ways to lessen potential resource impacts?

Other comments? Change address for God's Valley Timber Co. To So Woodland Management Inc PO Box 26 Lake Oswego OR 97034

Name: Jim Wick
Gods Valley Timber Co
Address: PO Box 26

City: Lake Oswego State: OR Zip: 97034

Please mail your comments by **February 25, 2011** to:
BPA Public Affairs - DKE-7
PO Box 14428
Portland, OR 97293-4428.
You may also fax your comments to 503-230-3285, call: 800-622-4519,
or submit comments online at *www.bpa.gov/comment*

Response to Comment 10009

The right-of-way would not be enlarged or moved as a result of the Rebuild Project, and all transmission line structures would be replaced in their current alignment. The mailing list has been updated to include the address change requested by the commenter.

BRPE10012
Sharon and Franklin Waterman,
Waterman Trust

February 8, 2011

BPA Public Affairs – DKE-7
P.O. Box 14428
Portland, Oregon 97293-4428

RE: Proposed Bandon-Rogue Transmission Line Rebuild Project

Dear BPA:

10012-1 Thank you for sending the EA for the "Proposed Bandon-Rogue Transmission Line Rebuild Project". After reviewing the EA, we are still very concerned with the impact this project will have on noxious weeds, primarily the spread of gorse and broom. We know BPA has done the preliminary weed assessment. However, the two year follow-up to assess new growth of noxious weeds plus treatment is totally inadequate as gorse seed can live in the ground for 40+ years plus gorse will sprout from the existing roots. The reason BPA does not have gorse under the power line from past projects on the Davis Creek Lane property is because we have taken care of the problem all at our own cost and time over the years. Oregon laws are very specific to the spread of noxious weeds and agriculture producers do not want these noxious weeds in productive pasturelands.

10012-2

10012-3

10012-4 Last year, a landowner on Davis Creek brought in a piece of equipment to do some work. This road has never had any gorse on it. However, while doing road maintenance, a small gorse plant was located at the work site. I treated the gorse with herbicide. Just spraying a little bit of herbicide on the plant does not do the job. It is best too use a sticker with the herbicide as well as one must spray the whole plant. Then within a couple months, BPA should be reviewing the sprayed gorse to ensure it has no green growth and if it does, it needs to be sprayed again.

10012-5 We are also concerned about the siting of the wash area for equipment. These wash stations need to be located in areas that will not spread the seeds to another landowner. Site areas need to be monitored and treated for weeds at a minimum of yearly and preferably more frequently. Where will the water from the wash station be disposed? Wash Stations on private lands need authorization from the landowner.

10012-6

10012-7

Suggestions for the changes to the EA weed section:

10012-8

1. Yearly noxious weed surveys plus treatment with the appropriate herbicide plus sticker and follow-up site visit with additional treatment if needed within a couple months.
2. BPA shall do yearly weed surveys and treatment of noxious weeds until the area is noxious weed free. (The seeds are in the ground and BPA needs to do continual noxious weed management.)

10012-9

10012-10

10012-11

3. All equipment with includes chain saws, etc. needs to be washed at the wash station and appropriate disposal site for the wash water. Landowners need to be notified and give authorization if site is on private land. Preferably wash stations should be on Hiway 101.
4. BPA will go out to a site and treat noxious weeds when a landowner calls in a complaint to BPA within a reasonable time or provide landowner with appropriate herbicide and sticker to treat the noxious weed infestation.

10012-12

We also have concerns about the vegetation disposal. In the past, BPA contractors have been "cut and runners" meaning they cut down trees and vegetation and left them without any clean-up, leaving a huge fire hazard under the power lines plus a safety hazard for BPA employees working the area for years to come. This happened on the Waterman property on FourMile. In fact, one of the cut trees fell onto the paved road and Charlie removed it. The tree could have easily hit a passing vehicle making the "cut and run" way of doing business a public safety hazard.

Suggestions for changes in the vegetation disposal:

10012-13

10012-14

1. BPA will work with the landowners to determine the best disposal method for the vegetation/trees. At the very least, vegetation shall be chipped and chips placed in an area that is acceptable to the landowner or the vegetation should be piled and burned on site in an area determined by the landowner.
2. After the contractors have completed the vegetation removal on the easement and roads, BPA will do a follow-up with the landowners to ensure the contractors have done the job in the manner agreed upon.

10012-15

I encourage BPA to ensure the easements are noxious weed free and protect the health and safety of your contractors, employees, landowners, and the public.

Thank you for reading my comments.

Respectfully submitted:

Sharon Waterman

Sharon Waterman, Landowner
Charlie and Sharon Waterman Trust

Franklin Waterman

Franklin Waterman, Landowner

Response to Comment 10012-1

In the Preliminary EA (Section 3.5, Vegetation, and Appendix D, Draft Weed Management Plan), BPA proposed to conduct a post-construction weed inventory, 2 years after construction, of areas disturbed by Rebuild Project construction activities. The purpose of this survey is to compare changes in weed distribution to those observed in the preconstruction weed survey. The post-construction survey would also provide BPA with detailed information on weed occurrences that would be used to implement appropriate control measures of weed infestations.

The second year after construction was proposed for the post-construction survey to allow adequate time for germination and growth of weed species. BPA considered your request to conduct an inventory after the first year following construction. The BPA Eugene District staff member who works on weed control in this area agrees that 1 year after construction provides adequate time for germination and growth of weeds in areas disturbed by construction. Therefore, BPA would conduct the weed inventory with concurrent control of weeds, where possible, the year following construction.

BPA recognizes that ongoing noxious weed management will be needed along the Bandon-Rogue transmission line. According to the current project schedule, construction would take place in 2011. The post-construction weed survey would take place in 2012, with concurrent treatment. Spot treatment of weed species by the BPA Eugene District would occur in 2013. This schedule would provide 2 successive years of post-construction weed control. Thereafter, the BPA Eugene District would continue its current weed control schedule, which includes chemical control every 2 years and mechanical control every 4 years. BPA Eugene District staff will continue to evaluate the effectiveness of the current chemical control methods and schedule. BPA staff will continue to accept feedback and comments on the effectiveness of BPA weed control efforts as they are implemented.

Response to Comment 10012-2

BPA acknowledges the excellent condition of the vegetation on your property. We realize this has been achieved through hard work and ongoing vegetation management on your part. Thank you very much.

Response to Comment 10012-3

BPA acknowledges your comment and the detrimental effect of weeds on agriculture lands, as stated in the Oregon Department of Agriculture Weed Control Program documents.

Response to Comment 10012-4

BPA uses Methylated Seed Oil (MSO) as a sticker combined with herbicides to ensure the herbicide adheres to the plant. The BPA Eugene District currently schedules chemical control every 2 years and mechanical control every 4 years. Because of the Rebuild Project, some targeted chemical control would be done as part of the weed inventory in 2012. Chemical control is also scheduled by the Eugene District for 2013. There are currently no plans to revisit and treat areas more than once within any 1 year.

Response to Comment 10012-5

BPA would incorporate wash stations into the existing access road, so that special wash station areas do not need to be created. This would minimize the area disturbed and help minimize the spread of weeds. The wash station locations would be monitored for weed presence and treatment during the first 2 years after construction and thereafter every 2 years, unless otherwise agreed upon with landowners or unless the BPA Eugene District determines that it is necessary to treat more frequently.

Response to Comment 10012-6

Wash stations would consist of geotextile fabric on the access road bed, overlain by rock. Water would percolate through the geotextile leaving the weed seeds within the rocked road surface on the geotextile fabric. Wash stations would not require off-site disposal of wash water.

Response to Comment 10012-7

Wash stations would be installed as part of the existing access road where BPA has an easement. Because wash stations would be within the scope of this easement, BPA does not plan to obtain separate authorization from the landowners for locating wash stations.

Response to Comment 10012-8

BPA recognizes that ongoing noxious weed management will be needed along the Bandon-Rogue transmission line. BPA Eugene District staff will continue to evaluate the effectiveness of the current chemical control methods and schedule (see response to Comment 10012-4, above). BPA staff will continue to accept feedback and comments on the effectiveness of BPA weed control efforts as they are implemented.

Response to Comment 10012-9

BPA would use chainsaws to fell danger trees. BPA does not expect chainsaws to become contaminated with weed propagules while cutting danger trees; therefore, the chainsaws would not need to be cleaned. Construction equipment and vehicles would be washed at wash stations. Wash stations would not require off-site disposal of wash water as explained in the response to Comment 10012-6. Because wash stations would be within the scope of this easement, BPA does not plan to obtain separate authorization from the landowners for locating wash stations.

Response to Comment 10012-10

BPA is looking for appropriate locations for wash stations along U.S. Highway 101 along access roads where BPA has an easement. Some appropriate wash station locations have been identified along U.S. 101, while other access road areas near U.S. 101 do not have appropriate locations. Wash stations need to be on level ground and cannot be too close to waterways and wetlands. In other areas, the BPA access road easement does not extend to U.S. 101.

Response to Comment 10012-11

BPA staff who conduct weed control activities accept feedback and comments on the effectiveness of BPA weed control efforts. When a landowner calls the BPA Eugene District, staff investigate the complaint within a reasonable timeframe and provide a response. BPA treats weeds with the herbicides listed in the Weed Management Plan (Appendix D) and uses Methylated Seed Oil (MSO) as a sticker.

Response to Comment 10012-12

Identified danger trees would be cut, limbed and left, unless otherwise agreed to in discussions between BPA and the landowner. Contractors are instructed that they cannot fell trees into roadways, and if this happens, they are to immediately remove the portion of the tree within the road and all debris. Please contact BPA immediately if any trees felled by BPA contractors block residential or farm roads, so that BPA can discuss the remedy with contractors.

Response to Comment 10012-13

Comment noted. As discussed in response to Comment 10012-11, BPA staff is willing to discuss landowner concerns and requests. Each circumstance is different based on access and topography. Because burning near transmission lines is not considered safe, burning is not a disposal option. Debris would be scattered to a depth of less than 18 inches, or chipped and scattered.

Response to Comment 10012-14

BPA sends prior notification letters to landowners before conducting vegetation management. These letters include BPA contact information. When BPA completed identification and marking of danger trees last fall, letters were sent to all affected land owners. BPA encourages landowners to contact the appropriate BPA staff person with concerns prior to vegetation removal and also to provide feedback to BPA after the job is complete.

Response to Comment 10012-15

BPA strives to maintain easements that are as free of weeds as possible given available time and resources. Working with local weed boards has proven to be an effective partnership. BPA has provided the Curry County and Coos County Weed Boards with the weed inventory of the right-of-way and will provide them with the weed survey of the access roads, when completed. We thank you for your concern for the health and safety of BPA employees and contractors and share your concern for the health and safety of landowners and the public.

BRPE10013
Michael Murphy

10013-1
10013-2
10013-3
10013-4
10013-5
10013-6

Hello Good Folks at BPA: I am a private citizen, commenting as such. However, I work for two local government agencies, and while I cannot speak officially for them, I believe they would concur with my comments below. The existing line is in place. It will need, or does now need, maintenance or rebuilding. It seems like a "no brainer" to rebuild this line to maintain reliability of the power grid. I would encourage installation of devices to protect the line from damage caused by predicted solar storms and related events, especially since those devices cost little when installed at the time of line rebuilding. We all want and NEED reliable power, and this line is our only source of that power in this area. Please rebuild it and keep the power grid reliable. It has proven to be reliable in the past, but demand is increasing and the existing line will soon be "outgrown." Everyone is served when the power grid functions well. There has been very limited, if any, environmental degradation (to my knowledge anyway) caused by the existing line. There is no reason to believe that the rebuilt line would add any degradation. Thank you for your efforts on our behalf.

Response to Comment 10013-1

BPA agrees that there is a need to rebuild the Bandon-Rogue transmission line to provide reliable power to the Oregon South Coast.

Response to Comment 10013-2

BPA installs equipment to protect the transmission line from lightning strikes. Overhead ground wire would be replaced on the transmission line near substations at the same time the conductor is replaced. Ground wire functions to route electricity from lightning to the ground through the structure. Counterpoise provides additional lightning protection in the same areas where overhead ground wire is located. Counterpoise, located in the ground at structure bases, would be replaced, as needed.

Response to Comment 10013-3

Comment acknowledged. Thank you for your support of the Rebuild Project. BPA strives to serve the need for reliable power in the Oregon South Coast.

Response to Comment 10013-4

BPA Network Planning studied the existing electrical capacity of the Bandon-Rogue transmission line and projected load growth in the Oregon South Coast. To provide additional electrical capacity would require BPA to upgrade the existing Bandon-Rogue transmission line from the existing 115 kilovolts (kV) to 230 kV. At this time, BPA did not see the need for additional electrical capacity in the Oregon South Coast. Therefore, the decision was made to rebuild and continue to operate the transmission line as a 115-kV wood-pole line. The proposed conductor, which meets current standards, would have a slightly higher electrical capacity than the existing line.

Response to Comment 10013-5

This EA discusses the existing conditions in the area for various environmental resources. It includes discussion of the potential impacts that rebuilding the transmission line would have on these resources. Most impacts would be related to the construction activities and BPA is proposing mitigation measures to avoid or minimize adverse impacts.

Response to Comment 10013-6

Thank you for providing a comment on the Rebuild Project. We appreciate receiving your thanks and are pleased to be a transmission provider for the Oregon South Coast.

BRPE10014
Will Christensen

10014-1 Overall BPA has been very professional in dealing with us. We do have some major issues in however. Permission to enter property letters http://www.bpa.gov/corporate/i-5-eis/documents/PEPform-new-Jan2010.pdf Permission to enter property form is misleading and disingenuous No option to deny permission. Permission slips have a yes or no box to check off. That is what permission means. These forms appear to mislead landowners into giving permission for study's on their properties when BPA has no inherent right to do these studies. It reads more like a notice. They are vaguely written do not explain landowners rights to deny access for environmental /archeological study's on their land. Elderly or uniformed people could easily be coerced into giving permission for something the have a right to deny.

10014-2 We were sent several of these Permission forms. I contacted BPA and explained to them that they didn't need an easement to our property because their property adjoins ours. They clearly agreed. If we had signed the permission letter we would have given them rights to enter our land for purposes other than repair and maintenance. Real estate agents contracted with BPA A BPA real estate agent came to our

10014-3 home with a proposal to buy our driveway as an easement . We were given very few details and pressed very hard to sell a driveway easement on the spot. Our concern is that older uninformed people are being coerced into turning over easements and access rights with strong arm tactics. BPA needs to clearly explain to landowners what their intent is,what rights property owners have and explain property owners rights to deny if any. We were able to work with BPA and come to an agreement that they didn't need another easement on our land. BPA canceled their offer. We should not have had been pushed by a real estate agent to give them something they didn't need in the first place. Contractors Our

10014-4 driveway is not an easement. BPA has free access to the easement part our land without using our driveway. Several times i have had to approach unmarked vehicles driving around property. While they claimed to be BPA contractors they failed to offer any ID. This is rural property and I have had issues with criminal trespass on our property. Any strange vehicle driving around and sneaking away does not play well with me. Other property owners in the area have similar complaints. Bpa's Oregon state and

10014-5 Federal mandate to purchase private land. BPA needs to make it extremely clear that they are mandated by both the Federal and State government to procure acreage for wildlife/environmental reserves. http://efw.bpa.gov/ I do not think most landowners understand that non profits bid with BPA for lucrative contracts to manage reserves. Under no circumstances should they be trespassing our land. We have serious issues with Non profits entering our land to scope out possible wildlife reserves. But environmental groups have been doing just that. Claiming to be Bonneville reps refusing to show BPA ID entering private property without permission even threatening landowners in Bpa's name. I would ask BPA to make clear to these non-profits that when they do this they are trespassing and risk arrest. I

10014-6 understand Bpa has a difficult job to do inm ating public and private needs.I completely agree with the need to upgrade and maintain transmission lines. I would urge that Bpa to be straightforward and honest with the landowners they serve. Remember that you are geusts on our land. You are not public master but servants!

Response to Comment 10014-1

You are correct that there is no “yes” or “no” box on the Permission to Enter Property form to check off to deny permission. BPA assumes the use of permission in the title of the form would enable people to understand that signing the form grants permission, and does not intend to mislead landowners. But your point is valid and your concerns regarding this form have been forwarded to the appropriate BPA staff in the Lands Department for their consideration.

Response to Comment 10014-2

BPA does not send Permission to Enter Property forms to landowners with existing easements, unless we seek to expand or change the easement in some way. These forms were sent to you, because BPA initially wanted to work with you to change the existing easement boundaries. BPA no longer seeks to change the easement. You are correct that if you had signed the form, BPA would have been given permission, subject to any limitations you noted on the form, to conduct activities such as survey and environmental review on your property.

Response to Comment 10014-3

We apologize that you felt that you received inadequate information and felt pressured to sell a driveway easement on the spot. We agree that BPA needs to clearly explain to landowners our intent in trying to acquire easements. Thank you for informing us of the nature of your experience and your concerns, so that we can consider ways to improve and ensure fairness in our dealings with landowners during easement negotiations.

Response to Comment 10014-4

Comment noted. We do not condone trespassing and understand that landowners need to be vigilant when strangers enter their property. If BPA contractors ventured into areas outside of the easement, we assume this was inadvertent and we apologize. These contractors should have identified themselves to you and provided you with appropriate BPA contact information. Our contractors have the phone numbers and other contact information of BPA staff administering their contracts and should provide this to you upon request.

Response to Comment 10014-5

BPA has not been aware of the misrepresentation of persons as BPA staff as you indicate, so thank you for bringing this to our attention. We understand your concerns and why you want verification that persons really are working for BPA. BPA staff are always willing to show their federal identification to landowners along BPA easements. Contractors should be willing to provide the contact information for the staff person within BPA under whom they are working, upon request. They should be willing to explain to project area landowners why they are near or on your property.

At this time, BPA does not seek to acquire fish or wildlife mitigation lands in fee on the Oregon South Coast. We are proposing to fund some riparian plantings on private lands as part of the mitigation for this project through a local Soil and Water Conservation District, but do not plan to acquire rights in the properties.

Response to Comment 10014-6

We thank you for your understanding, your support of the Rebuild Project, and your honest feedback on your experiences during site and environmental review. Our goal is to develop respectful and courteous relationships, based on honest dealings with landowners along our access road and transmission line easements. We strive to serve the public both in our personal interactions with landowners and in our role as transmission providers. Thank you for reminding us that BPA staff must exhibit the highest standards of professional integrity in our dealings with landowners. We require the same of our contractors and will strive to clearly communicate this.

BRPE10015
Christopher W. Claire
Oregon Department of Fish and Wildlife

Oregon
John A. Kitzhaber., Governor

Department of Fish and Wildlife
Charleston Field Office
63538 Boat Basin Dr.
P.O. Box 5003
Charleston, OR 97420
(541) 888-5515
FAX (541) 888-6860

February 15, 2011

Kimberly St. Hilaire
Bonneville Power Administration
Public Affairs Office – DKE-7
P.O. Box 14428
Portland, OR 97293-4428

RE: Bandon-Rogue No. 1 Transmission Line Reconstruction Project.

Dear Kimberly,

10015-1 The Oregon Department of Fish and Wildlife (department) appreciates the Bonneville Power Administration (BPA) staff collaboration and field tours relating to the Bandon-Rogue No. 1 Transmission Line Reconstruction Project. The department fully recognizes and supports the need to provide safe and efficient
10015-2 electricity to customers in the South West Oregon region. This construction project will transect aquatic and
10015-3 upland habitats in various condition and importance as categorized in OAR 635-415-0025 www.dfw.state.or.us/OARs/415.pdf. The department provides the following comments in an effort to assist BPA in reconstructing their transmission line in a manner that minimizes impacts to Oregon's fish and wildlife resources.

10015-4 The BPA reconstruction of the Bandon-Rogue No. 1 line will affect lands in the Rosa, Johnson, Crooked, and China creek watersheds of the department's Coos-Coquille-Tenmile Fish District and Mid-South Coast Wildlife Management District. Johnson Creek is considered as having had Oregon Coast ESU coho (*Oncorhynchus kisutch*) in the recent past, however, the current status of coho in the stream is unknown. China, Johnson, and Crooked creeks currently support resident coastal cutthroat trout (*O. clarki, clarki*) and likely lamprey (*Lampetra spp*). The status of fish in Rosa Creek is unknown, however, cutthroat trout are suspected to be present.

The powerline reconstruction will also potentially impact a number of streams and associated uplands in the department's South Coast Fish District and South Coast Wildlife Management District. The reconstruction will transect the Two-mile, Four-mile, Davis, New Lake (Bethel, Butte, Morton creeks), Floras, Sixes, Elk, Hubbard, Brush, Euchre, and Rogue watersheds. Two-mile, Four-mile, Davis, New Lake, Floras, and Sixes support Oregon Coast ESU coho, steelhead (*O. mykiss*), coastal cutthroat trout, Pacific lamprey (*L. tridentata*) and western brook lamprey (*L. richardsoni*). In addition, Sixes River and Floras Creek watersheds support populations of fall Chinook (*O. tshawytscha*). Southern Oregon/Northern California coast coho, steelhead, coastal cutthroat trout, and lamprey are present in Elk, Hubbard, Brush, Euchre, and Edson (Rogue) watersheds. Elk River also supports a population of fall Chinook.

10015-5 Concerns and recommendations provided here specifically address habitats in the Coos-Coquille-Tenmile Fishery District and the Mid-South Coast Wildlife Management District. Comments relating to fish and wildlife habitats managed by the South Coast districts will be provided by staff in the department's Gold

10015-5 cont. Beach office. We recognize that the Environmental Assessment addresses or notes a number of the concerns listed below.

Concerns:

10015-6 1. Twelve watersheds of varying size are within the powerline reconstruction project area. Road rebuilding/new construction associated with powerline construction will likely disturb soils. These dislodged or unconsolidated soils can potentially be transported with overland flow precipitation into streams and watercourses.

10015-7 2. Disturbance of soils in the project area will likely open the door for establishment of undesirable plant species i.e. European gorse (*Ulex europaeus*), which have notable potential to impact terrestrial habitat productivity for a number of non-game and game wildlife species. The powerline corridor could potentially become a route for weeds to spread relatively unchecked if preventative action is not taken.

10015-8 3. The department recognizes that there may be onsite fueling, and thus concern that chemicals or fuels associated with equipment operations could be spilled and enter soils or streams.

10015-9 4. Riparian woody vegetation is critical for stream productivity and minimizing solar input impacts to water quality, but maintaining this vegetation can be in conflict with powerline construction goals.

10015-10 5. Reconstruction of existing roads that have grown closed and construction of new roads can allow for significantly increased access by ATV traffic in particular sections of the powerline reconstruction project area. This can affect the vulnerability of many wildlife species and facilitate extensive trail building pioneering, which can negatively affect water quality. Additionally, these trails are locations where undesirable plants can become established.

10015-11 The following recommendations and suggested requirements are provided as guidance for alleviating potential ecological impacts of the project.

Recommendations: Mitigation actions should be in-kind/in-proximity whenever possible (Refer to Oregon Department of Fish and Wildlife Mitigation Policy; OAR 635-415-0025).

10015-12 1. Road reconstruction/new construction should:
   a. Clean existing culvert entrances and whenever possible direct road ditch flows into upland sites where sediment laden overland flow can dissipate into soils rather than enter watercourses.
   b. Install new additional culverts as necessary to ensure that overland flow is reduced and filtered adequately prior to entering streams.
   c. Keep road prism widths at the minimum necessary to allow access and complete the work. This will help reduce soil disturbance.
   d. Include seeding road cutslopes and fill slopes with a mulch based mixture will greatly decrease the duration these features are unvegetated and contribute to reduced erosion rates.
   e. Gravel should be applied to all locations where roads approach and leave a stream crossing to prevent weather and vehicle/equipment generated sediment from mobilizing and entering streams.

10015-13 2. If fueling of equipment occurs on site, care should be taken to prevent spillage. Fuel absorbent materials should also be on site in order to contain potential spills.

10015-14 3. Heavy equipment should not be operated in wetlands whenever possible. When working in stream channels (i.e. culvert replacement) or adjacent to streams specific efforts should be implemented to minimize impacts within the high water zone.

10015-15 4. Riparian vegetation within 30 feet of the mean high-water zone of streams should remain fully intact whenever possible. If removal of woody vegetation near streams is necessary, trimming is preferred over complete removal.

10015-16 5. Pre-project inspections to determine the existing extent of weed abundance in the powerline corridor would establish a solid baseline. Annual inspection and weed control actions will likely be necessary for a number of seasons following reconstruction. Seeding of disturbed sites with hardy perennial grasses often will reduce establishment of undesirable plants. Washing of equipment prior to entering sections of the project and after leaving would help reduce the potential for movement of weed seeds. BPA can contact the Oregon State Extension office in Myrtle Point, OR for information pertaining to local weed problems and solutions (541-572-5263).

10015-17 6. Restricting access to powerline roads following completion of the project will reduce or eliminate the potential for ATV trailing within the powerline corridor. This may be accomplished by constructing steel gates at access points or in applicable locations placing boulders and "tank traps" in the roadway.

Requirements

10015-18 1. If culverts are replaced or installed for crossings on fish bearing streams they need to be installed in a manner that meets or exceeds Oregon State Fish Passage Criteria OAR 635-412-0005 available at http://www.dfw.state.or.us/OARs/412.pdf. This includes ensuring that the pipe is equal to or exceeds the channel mean high-water width dimensions, has at least three feet of headspace above the water level to the top of the structure, is embedded 20% if rounded/squashed or is open bottom, and has adequate sized substrates installed 90 degrees to the stream channel inside the crossing to maintain finer substrates and ensure that stream-like passage will be accommodated.

10015-19 2. The BPA project notification has outlined intent to complete work below the mean high water mark along streams or within tidally influenced lands (i.e. culvert replacements). For maintenance/construction actions and other work planned in the zone below the mean high-watermark of streams, the department these actions coincide with the in-water work window for streams, which is designated as the period from July 1-September-15.

Please feel free to contact Christopher Claire at 541-888-5515 or Todd Confer (541-247-2212) if you have any questions regarding these comments.

Sincerely
Christopher W. Claire

Christopher W. Claire
Habitat Protection Biologist

cc. Michael Gray
Todd Confer
Stuart Love

Response to Comment 10015-1

BPA thanks Oregon Department of Fish and Wildlife (ODFW) staff members, who were very cooperative, helpful, and responsive to requests for information. The willingness of the professional biologists in the local area to assist BPA was much appreciated and the resulting fish and wildlife analysis is stronger than it would have been without ODFW support. BPA appreciates ODFW guidance on ways to implement the project that would avoid or minimize impacts.

Response to Comment 10015-2

Comment noted.

Response to Comment 10015-3

Comment noted. Responses to these comments are provided below.

Response to Comment 10015-4

The table in Appendix G (Fish Species Occurrence in Rebuild Project Area Streams) of the EA has been revised to add the species and waterways listed above. The table was originally created to list only special-status fish species but was not labeled as such. The table was expanded to include all fish species and occurrences known in the Rebuild Project area, so that impacts on all fish habitat in the study area were considered in the EA.

Response to Comment 10015-5

Comment noted.

Response to Comment 10015-6

The EA acknowledges that sedimentation can result from soil disturbance during construction. Without adequate best management practices in place to prevent sediments from reaching waterways, there is a potential to degrade water quality in streams in the study area, an adverse impact on fish and wildlife species and their habitat. To address this issue, engineers properly designed access roads, including drainage structures and culverts to ensure proper drainage and to deter erosion. Engineers sited transmission line structures as far as possible from waterways to minimize the amount of disturbance in riparian areas. BPA would implement best management practices that limit construction disturbance areas, limit vegetation removal, contain sedimentation, and prevent erosion. In addition, BPA would require prompt revegetation after construction and monitoring of site stabilization to limit sedimentation. Mitigation measures proposed in the following resource areas in this EA directly and indirectly relate to reducing sedimentation: Geology and Soils (Section 3.4.3), Vegetation (Section 3.5.3), Waterways and Water Quality (Section 3.6.3), and Fish (Section 3.9.3).

Response to Comment 10015-7

During scoping for the Rebuild Project and since that time, agencies and landowners have expressed their concerns regarding the potential for weed spread and invasion as a result of disturbance during construction. BPA prepared a draft Weed Management Plan (Appendix D in the Preliminary EA) and revised this plan based on comments (Appendix D of the Final EA).

BPA sent the draft plan to ODFW via e-mail on February 23, 2011, for any specific comments they would like to submit regarding weed control.

BPA has modified the schedule for post-construction weed control based on comments received from landowners. According to our current proposed schedule, construction would take place in 2011. The post-construction weed survey would take place in 2012. Spot treatment of weed species by the BPA Eugene District would occur in 2013. This schedule would provide 2 successive years of post-construction weed control. Thereafter, the BPA Eugene District would continue its current weed control schedule: chemical control every 2 years and mechanical control every 4 years.

Response to Comment 10015-8

Spill prevention and control best management practices in BPA contract specifications address preventing contamination from chemicals or fuels entering waterways. Section 3.6 (Waterways and Water Quality) and Section 3.7 (Wetlands) of the EA identify many of these management practices that would minimize or avoid contamination of soils or streams in the area. Current contract specifications that would apply to the Rebuild Project include the following.

- Store, fuel, and maintain all vehicles and other heavy equipment pre- and post-construction in a single, approved designated vehicle staging area located a minimum of 150 feet away from any stream, waterbody, or wetland.
- Prevent spills of petroleum products, chemicals, caustics, paints, fresh cement, lime or concrete, and other harmful materials; keep spill containment and cleanup materials readily available at work sites.
- Ensure that personnel, site or transient, are knowledgeable about spill response procedures and can act quickly to contain spills, remediate spills, and secure the services of a spill response contractor if needed.
- Store potential pollutants in accordance with manufacturer's directions and in a secure location away from storm-drain inlets and other water bodies.
- Prior to bringing equipment onto the site, inspect the equipment and certify that it is clean, with no greasy build up, and that it does not have fluid leaks. On a weekly basis, inspect equipment and tanks for drips or leaks and make necessary repairs.
- Locate refueling and servicing operations where spilled material cannot enter natural or human-made drainage conveyances (e.g., ditches, catch basins, ponds, wetlands, streams, and pipes). Use pumps, funnels, absorbent pads, and drip pans when fueling or servicing vehicles.
- Provide and maintain clearly marked spill kits throughout the project site for cleaning up spills that may occur; restock materials within 24 hours, if used.
- In the event of a spill, immediately contain the spill, eliminate the source, and deploy appropriate measures to clean and dispose of spilled materials in accordance with federal, state, and local regulations.

Response to Comment 10015-9

BPA agrees that removal of woody vegetation in riparian areas can adversely affect fish and wildlife habitat and water quality. During the design phase of the Rebuild Project, BPA attempted to avoid siting project elements in riparian areas, where possible, to minimize removal of riparian vegetation. BPA also attempted to avoid siting new structures and access roads within 200 feet of waterways during the design process, where possible. For example, BPA is retiring an existing road over Bethel Creek to avoid bridge replacement and access road work in a high quality riparian area that serves as coho salmon habitat.

BPA's vegetation management program requires maintenance of a 25-foot safety zone of clear space around transmission conductors to prevent tree-caused power outages. Crews clear trees and brush that could grow within 25 feet of the lowest point that the conductor could sag to on a hot day. During project design, BPA Eugene District staff requested that taller structures be placed in the Floras Creek riparian area (Structures 14/4 and 14/5) to enable crews to clear less vegetation in sensitive riparian zones. The proposed structures are taller, allowing more clearance and less vegetation removal.

As discussed in the EA, prior to construction, BPA would hold a preconstruction meeting with construction contractors and would explain water quality and waterways mitigation measures, including required best management practices, permit requirements, restrictions while working near waterways, and field flagging/staking of water features to be avoided.

In addition, during construction, BPA would minimize work areas in riparian areas to protect riparian vegetation. Construction limits within 200 feet of streams would be delineated, as specified in the Stormwater Pollution Prevention (SWPP) Plan, with a sediment fence, straw wattles, or similarly approved erosion and stormwater control best management practices, to eliminate sediment discharge into waterways, minimize the size of construction disturbance areas, and minimize removal of vegetation, to the greatest extent possible. Tensioning sites, which require use of a large vehicle, would be located at least 200 feet away from surface waters and outside of 100-year floodplains, if possible.

Response to Comment 10015-10

BPA and ODFW share a similar interest in limiting unauthorized access to our transmission line rights-of-way, which can result in vandalism of structures and equipment and misuse of access roads leading to damaged road surfaces. Damage to structures and roads is expensive and time consuming to address. BPA has found most landowners are also eager to prevent unauthorized access and willing to work with us to allow installation and maintenance of locked gates at appropriate access points. The BPA road engineer surveyed the road system along this transmission line corridor and would be installing 16 new gates, with the permission of landowners. BPA would also repair any existing gates that require maintenance, in conjunction with landowners.

Response to Comment 10015-11

BPA concurs with the commenter's recommendation. BPA is proposing riparian restoration as mitigation, including native plantings along three waterways crossed by the transmission line. The following waterways, listed as impaired for water temperature by Oregon Department of Environmental Quality would be the location for riparian restoration: Butte Creek, Willow Creek, and Elk Creek. BPA sent the riparian restoration proposal to ODFW and the National Marine Fisheries Service (NMFS); both agencies agreed the proposal is appropriate mitigation for the types of impacts the Rebuild Project would have on waterways.

Response to Comment 10015-12

BPA would design and construct roads in accordance with the commenter's recommendations.

Response to Comment 10015-13

Comment noted. See the response to Comment 10015-8 for specific information on chemical spill prevention and clean-up requirements and procedures.

Response to Comment 10015-14

As discussed in the EA, BPA avoided siting new structures and access roads within 200 feet of waterways during the design process, where possible, to avoid impacts on wetlands and fish habitat. BPA avoided instream work at several locations through proposing the use of a bridge rather than culvert at one location and through retiring two stream crossings from BPA use. BPA designed crossings in coordination with ODFW and NMFS to meet fish passage criteria and to accommodate 100-year flow conditions.

At a preconstruction meeting with construction contractors, BPA would explain water quality, wetlands, and waterways mitigation measures, including required best management practices, permit requirements, restrictions while working near waterways and wetlands, and field flagging/staking of water features to be avoided. Most wetlands would be avoided by flagging or fencing and providing direction to contractors to avoid these areas. BPA would minimize disturbance to wetlands and wetland buffers by reducing structure construction work areas in or near wetlands to 50 feet by 50 feet per structure (approximately 0.06 acre), if possible, and would install signage, fences, or flagging, where needed, to restrict vehicles and equipment to designated routes.

During road work, various measures also would be implemented to minimize impacts on streams. The use of best management practices, such as those relating to erosion and sediment control and work area minimization would help minimize stream impacts. During road work, material would not be sidecast within 300 feet of streams. BPA is currently consulting with NMFS on Essential Fish Habitat, which includes almost all of the streams in the study area, and has proposed conservation measures and best management practices that would be implemented to protect streams. All instream work would be done according to permit, during instream work periods, and implementing best management practices. BPA also is currently consulting with NMFS on instream work in coho streams and would follow requirements in the Biological Opinion issued by NMFS for the Rebuild Project.

Response to Comment 10015-15

As described in response to Comment 10015-9, BPA would attempt to minimize disturbance to riparian areas during the Rebuild Project. BPA guidance and policies regarding ongoing vegetation management after construction is found in the *Transmission System Vegetation Management Program Environmental Impact Statement* (Vegetation Management EIS). This document is available electronically on BPA's website: http://efw.bpa.gov/environmental_services/Document_Library/Vegetation_Management/FEIS0285.pdf; hardcopies are available by calling BPA's toll-free document request line: 1-888-276-7790. Page 168 of the Vegetation Management EIS includes information on mitigation measures to minimize removal of riparian vegetation. BPA requires a 30-foot buffer along streams; mechanical removal of vegetation is not allowed within this buffer.

Response to Comment 10015-16

BPA conducted a weed inventory of the Bandon-Rogue right-of-way for weed occurrence in fall 2010, mapping locations and estimating density of weed species. BPA would conduct a weed inventory of project access roads in spring 2011. BPA would then conduct a post-construction weed inventory 1 year after construction of areas disturbed by Rebuild Project construction activities. The purpose of this weed survey is to compare changes in weed distribution to those observed during the preconstruction weed survey. It would also provide BPA with detailed information on weed occurrences that would be used to implement appropriate control measures of weed infestations.

BPA recognizes that ongoing noxious weed management will be needed along the Bandon-Rogue transmission line. See response to Comment 10015-7 for the planned weed control schedule. BPA Eugene District staff will continue to evaluate the effectiveness of the current chemical control methods and schedule (see response to Comment 10012-4). BPA staff will accept feedback and comments on the effectiveness of BPA weed control efforts.

BPA will consider the addition of hardy perennial grass seeds to the seed mix that would be used for revegetation to help reduce establishment of undesirable plants. Some landowners will specify their preference for replanting areas disturbed on their property. Seed mixes for revegetation generally include grass species.

BPA would install wash stations in appropriate locations to ensure vehicles entering each work area are weed free.

BPA contacted Oregon State Extension office in Myrtle Point, Oregon, on February 25, 2011, to discuss weed control issues and solutions. BPA has also sent information to Oregon Department of Agriculture weed control program staff, Coos County and Curry County Weed Boards, and County Commissioners who address weed issues.

Response to Comment 10015-17

Please refer to the response to Comment 10015-11 for detailed information on installation of gates. BPA designs and constructs gates to preclude vehicle access, as fully as possible. BPA does not propose to place boulders because of potential safety issues. BPA does not propose to install tank traps because of the additional ground and vegetation disturbance and potential safety issues for landowners walking near and around their gates.

Response to Comment 10015-18

BPA coordinated review of all culvert replacements and new culvert installation with ODFW and NMFS to determine which culverts need to meet fish passage requirements. BPA, ODFW, and NMFS staff participated in several site visits and meetings to discuss locations and fish passage needs. ODFW was willing to visit proposed culvert locations to determine if fish are present or if natural barriers to fish passage are present. BPA hired fish biologists to conduct stream surveys. BPA coordinated design review and we understand that we have met all ODFW requirements. The NMFS engineer has reviewed all culverts that need to meet NMFS criteria for coho salmon. BPA is currently in formal consultation with NMFS, which will culminate in the issuance of a Biological Opinion by NMFS. BPA appreciates the assistance we received from ODFW and NMFS in addressing fish passage requirements.

Response to Comment 10015-19

BPA would conduct all work within the designated in-water work period.

BRPE10016
Michael and Marita Stockford

BONNEVILLE POWER ADMINISTRATION

Proposed Bandon-Rogue Transmission Line Re

Does the preliminary EA analyze the resources important to you?

yes

Are there other ways to lessen potential resource impacts?

10016-1 move equipment evenings, nights, early morning to lessen impact during tourist season

Other comments?

10016-2 GO FOR IT.

Name:

Address:

City: Zip:

Please mail your comments by **March 11, 2011** to:
BPA Public Affairs - DKE-7
PO Box 14428
Portland, OR 97293-4428.
You may also fax your comments to 503-230-3285, call: 800-622-4519,
or submit comments online at *www.bpa.gov/comment*

Response to Comment 10016-1

Comment noted. Because of the limited duration of Rebuild Project construction activities and the likely infrequent movement of project-related equipment on main travel routes for tourists, it is not expected that movement of this equipment would affect tourism activities in the project vicinity. Nonetheless, before starting construction, the contractor lands liaison would hold a public meeting to provide information on construction activities and schedule, discuss any concerns with how the Rebuild Project would be implemented, and explain who would be available to provide information, answer questions, and address concerns during project implementation. This would also provide another opportunity to voice concerns and obtain contact information.

Response to Comment 10016-2

Thank you for supporting BPA's efforts to maintain the Bandon-Rogue transmission line.

BRPE10017
Charlie Waterman

February 17,2011

BPA Public Affairs – DKE-7
P.O. Box 14428
Portland, Oregon 97293-4428

RE: PROPOSED BANDON-ROGUE TRANSMISSION LINE REBUILD PROJECT

Dear BPA:

10017-1 We received notice from you dated February 8, 2011 stating BPA is planning to conduct a vegetation control project on the transmission line rights-of-way corridor. The project was scheduled to begin the week of Feb. 7, 2011 near Bandon and continue for several months going toward Gold Beach.

10017-2 We expect that BPA comply with the preliminary EA, page 2-8. It states vegetation would be cleared along existing transmission line access road (brushing) as needed. Brushing would be done to maintain a clear travel corridor approximately 20 ft. wide. On either side of the 14 foot wide access road bed, an area approximately 3 ft. wide by 20 ft. high would be brushed. Most access roadsides have been previously disturbed during the initial access road construction and subsequent maintenance. Most of the vegetation that would be removed along access roads consists of shrubs and saplings. The contractor, Don, said they were not going to do this at this time. Don passed the concern on to Mark and an investigation needs to be done on who's responsibility it is to do the work: the line contractor or the maintenance crew. These issues should have been resolved in the planning of the project and when Sharon called after receiving the letter from you.

So, the reason for this letter is to ensure your contractors follow the EA and clear the right-of-ways according to the specifications in the EA. We have
10017-3 maintained the right-of-way for years and this project is the time you need to do your share of the maintenance.

If you have any questions, feel free to call me at the number below.

Respectfully,

Charlie Waterman

Charlie Waterman

Response to Comment 10017-1

Comment noted.

Response to Comment 10017-2

Comment noted. The vegetation control referenced by the commenter was part of a vegetation management project for ongoing maintenance and is a separate project from the Rebuild Project. BPA contacted the commenter and we understand that the road in question was brushed.

Response to Comment 10017-3

BPA has contacted the commenter to discuss this request. We hope that this communication will serve as the basis for ongoing communication concerning vegetation management on the portion of the BPA right-of-way on your land. BPA sends prior notification letters to landowners before conducting vegetation management. These letters include BPA contact information. BPA encourages you to contact the appropriate BPA staff persons with your concerns prior to vegetation removal and also to provide feedback after the job is complete.

BRPE10018
Robert Donaldson

B O N N E V I L L E P O W E R A D M I N I S T F

Proposed Bandon-Rogue Transmission Line Rebuild Project

RECEIVED
FEB 28 2011

Does the preliminary EA analyze the resources important to you?

Are there other ways to lessen potential resource impacts?

Other comments?

I would to request that the old poles be left on my property. I can put them to use and BPA won't have to dispose of them.

Please let me know who to contact about this.

Name: Robert Donaldson

Address:

City: State: Oregon Zip:

Please mail your comments by **March 11, 2011** to:
BPA Public Affairs - DKE-7
PO Box 14428
Portland, OR 97293-4428.
You may also fax your comments to 503-230-3285, call: 800-622-4519,
or submit comments online at *www.bpa.gov/comment*

Response to Comment 10018

BPA is in the process of coordinating with the commenter to discuss this request.

BRPE10019
Robert L. George

BONNEVILLE POWER ADMINISTRATION

Proposed Bandon-Rogue Transmission Line Rebuild Project

Does the preliminary EA analyze the resources important to you? Yes

Are there other ways to lessen potential resource impacts?

Because Bethel MTN. LN. will be used a Lot By your equiptment, being a mayor Acces Road in The Area: As I have a home at 87137 Bethel MTN. LN. for Sale at This Time, your Traffic & Dust caused by your equiptment will deter any sale of my property.

(pave Road)

Other comments?

I request That before any equiptment is used on This portion of Bethel MTN. LN. That The road shall be paved and maintained during use. or buy my place at asking price.

(Mayor use will deter any sale on My property)

Please Reply to The Adress below and OR Ph

Name: Robert L. George

Please mail your comments by **March 11, 2011** to:
BPA Public Affairs - DKE-7
PO Box 14428
Portland, OR 97293-4428.
You may also fax your comments to 503-230-3285, call: 800-622-4519,
or submit comments online at *www.bpa.gov/comment*

Response to Comment 10019

Comment noted. There is no access road work proposed along Bethel Mountain Road, so the main inconvenience to you would be the passage of construction vehicles and equipment past your property. Bethel Mountain Road would be used by construction crews to access five structures: Structures 10/3, 10/4, 10/5, 11/1, and 11/2. This stretch of the transmission line corridor is approximately 0.5 mile in length. These five structures would be removed and replaced. Bethel Mountain Road would be used by construction crews to access areas along the transmission line right-of-way where access roads would be reconstructed or improved. No culvert work is needed in this area, so that decreases the time needed to complete this access road work.

Landowners near access roads would experience a temporary increase in noise from increased traffic when construction vehicles pass. The road would be watered, as needed, to suppress dust. The traffic noise is not something we can eliminate, but contractors are required to drive at speeds of less than 15 miles per hour, which should help decrease the noise.

After construction, there would be additional visits to this area to revegetate and stabilize any areas disturbed by construction. Because the life of the rebuilt transmission line is 50 years, it is unlikely that a new owner would have to experience the inconvenience of construction to rebuild this transmission line. Once the transmission line is rebuilt and access roads are improved, maintenance activities would be needed less frequently and there would be decreased visits to this stretch of the transmission line.

BRPE10020
Leonard Cline

The proposed wash station at the end of our driveway on bearhead mtn ln would present a access problem when a vehicle is being washed. We are planning on putting our property on the market in March/April and we need access at all times. We would propose that you move the wash station to the East, beyond the driveway access. Our easement for CCEC shows a 14 foot right of way, it seems this is to small to wash trucks and pass the area at the same time. We have a leach field to the south so widening in this area is not an option. The area 200'+- to the east would solve the problem and provide water drainage. Please consider this option as the existing site is not a good choice. Please reply ASAP.

Response to Comment 10020

BPA would move the wash station to the east to avoid your driveway and not affect access to your property.

BRPE10021
Mary Wahl/Wahl Ranch

Comments from Wahl Ranches & Co. (structures 11/7, 12/1 & 12/2) on BPA's Preliminary Environmental Assessment (EA)

General Comments:

10021-1 1. We appreciate very much BPA's offer to install a wash station at the entrance to our property as a way to avoid additional invasive weed infestation.

10021-2 2. Our experience over the years with the work done by and for BPA on the transmission lines leads us to the point that we are requesting to use our own contractors to the maximum extent possible, so we can avoid additional invasive weed infestation, soil and vegetation disturbance, erosion, sedimentation of creeks and waterways, and loss of trees and native vegetation.

10021-3 3. Where it is not possible to use our own contractors to do the work on our property, we are requesting that BPA at least restrict the use of other equipment to rubber tire equipment, rather than tracked equipment. This will help avoid bringing in invasive weeds, and hopefully will also avoid erosion and sedimentation.

10021-4 4. We appreciate that one of the key purposes of the action, as outlined in the EA, is to minimize environmental impacts, because employing the "best management practices" identified in the EA will help avoid some of the impacts we have seen occur on our property, and may help restore environmental conditions over time. Please consider the additional practices we request here in order to protect the environment and the ranch land impacted by the transmission lines.

Specific Comments:

10021-5 1. Page 2-7: We have notified the project manager that we are not interested in a new access road on our property, due to concerns about additional invasive weeds, loss of the tree crop if the new access road were built, and the fact that the area proposed for new construction is steep, slide-prone, and above a fish-bearing stream.

10021-6 2. 2-7, 2-8: As noted above, we believe the best way to avoid any additional invasive weeds is to hire a local contractor who has done work for us in the past without bringing in invasive weeds, and whose work is highly regarded, to do any road improvement or road reconstruction. If that is not possible, we request that:

   a. all equipment is washed before entering our property;

10021-7 b. wash water is not disposed of in creeks, waterways or wetlands, and that it be managed in ways that minimize erosion;

10021-8 c. care is taken to avoid erosion and sedimentation both during the project, and post-construction (erosion and sedimentation are more likely post-construction when the rains occur, so we are requesting that any work be done in ways that consider the post-construction impacts and try to avoid them);

10021-9 d. care is taken to do only the minimum vegetation and soil disturbance, to avoid both creating potential seed beds for invasives, and damaging either soil or existing vegetation; and

10021-10 e. gravel or rock brought in for road improvement/ reconstruction come only from sources without gorse or other invasives.

10021-11 3. 2-9, 2-10: We request that staging areas for pole removal and installation be kept as small as possible, and that staking and/ or flagging be used to make the boundaries clear to anyone doing the work.

10021-12 4. 3-6: In riparian areas on our property, we request that care be taken to cut or remove the minimum number of trees and existing vegetation. We also ask that there be clear instructions to all people doing work that NO alders or vine maples be cut unless we are first notified that that is being planned, and a natural resource agency expert (e.g., Oregon Department of Fish and Wildlife or US Fish and Wildlife) is consulted about whether such removal is necessary and/ or whether it would damage the riparian area.

10021-13 5. 3-10: We request that snags be left in place to the maximum extent possible, since those are such valuable wildlife habitat.

Thank you for the opportunity to comment.

Response to Comment 10021-1

Comment noted.

Response to Comment 10021-2

The commenter's request is acknowledged. Subsequent discussions with this commenter did not result in BPA agreeing to the use of the commenter's contractors. Nonetheless, BPA is committed to taking all reasonable steps to ensure that contractors do not introduce invasive species, by installing wash stations and ensuring they are used before workers and equipment enter private landowners' property. BPA will avoid or minimize disturbance of soil or vegetation, limit erosion and sedimentation, quickly stabilize sites, and limit disturbance of vegetation to the extent possible. Access road crews will restrict their work and travel to areas within existing road easements. Please refer to the Mitigation Action Plan (Appendix J of the Final EA) for a list of the measures that the construction contractor would be required to follow.

Response to Comment 10021-3

BPA does not propose to use rubber tire equipment on your property, because it would not provide adequate traction, and therefore would be potentially unstable. It would also be difficult to maneuver, given the steepness of the terrain. Due to safety concerns, tracked vehicles would be used. To minimize the risk of weed infestation, equipment would be washed prior to entry, construction areas would be minimized, and disturbed areas would be revegetated.

Response to Comment 10021-4

Thank you for acknowledging our efforts to minimize environmental impacts. We thank you for your suggestions.

Response to Comment 10021-5

Comment noted. BPA plans to work on the existing access road in this area, rather than attempt to relocate this road on the commenter's property.

Response to Comment 10021-6

As discussed in response to Comment 10021-2, the contractor selected by BPA to conduct road work would be required to use a wash station and wash all equipment before entering your property.

Response to Comment 10021-7

As discussed in response to Comment 10012-6, wash stations would consist of geotextile fabric on the access road bed, overlain by rock. Water would percolate through the geotextile and would not be expected to cause erosion. Wash stations would not require off-site disposal of wash water.

Response to Comment 10021-8

Several mitigation measures are identified in Section 3.4.3 of the EA to minimize or avoid erosion and sedimentation both during and after project construction. BPA would conduct peak construction activities during the dry season (between June 1 and November 1), as much as

possible, to minimize erosion, sedimentation, and soil compaction. As part of the design process, the road engineer properly designed access roads, including drainage structures and culverts to ensure proper drainage and to deter erosion. BPA would implement best management practices that limit construction disturbance areas, limit vegetation removal, contain sedimentation, and prevent erosion. In addition, BPA would require prompt revegetation after construction and monitoring of site stabilization to limit sedimentation. Additional mitigation measures in this EA that directly and indirectly relate to reducing sedimentation and erosion are identified in Vegetation (Section 3.5.3), Waterways and Water Quality (Section 3.6.3), and Fish (Section 3.9.3).

Response to Comment 10021-9

As stated in the Mitigation Action Plan (Appendix J of the Final EA), BPA would restrict construction activities to the area needed to work effectively, in order to limit disturbance of native plant communities to the minimum amount necessary to prevent spread of weed species.

Response to Comment 10021-10

BPA proposes to use rock for road work from weed-free quarries, as stated in Section 3.5.3, Vegetation, of the EA.

Response to Comment 10021-11

See response to Comment 10021-9. As discussed in Section 2.1.2 of the EA, staging areas are generally located on existing large, level, paved sites in commercial or industrial areas or other previously disturbed areas, so any new surface disturbance from these areas typically is minimal to non-existent. Concerning staking and flagging, as discussed in Section 3.5.3, BPA would install staking or flagging in and near any sensitive areas along the transmission line corridor to restrict vehicles and equipment to designated routes and work areas.

Response to Comment 10021-12

This comment was forwarded to the BPA Eugene District vegetation management specialist who has contacted you. Your request concerning removal of riparian vegetation was met and we understand you observed the vegetation removal on your property. There was no vegetation clearing in riparian areas. There is no danger tree removal proposed on your property at this time.

Response to Comment 10021-13

There is no danger tree removal proposed on the commenter’s property at this time, so no snags would be affected. In other areas along the transmission line corridor, if a snag poses no threat to the transmission line, BPA would not remove it. Because snags are unsafe to climb, we are unable to top them.

BRPE10022
Paul Stephan

Mr. Stephan received his letter from BPA regarding the transmission line rebuild of Bandon-Rogue. He has some concerns. First of all he is wondering if BPA has any plans to upgrade the road that will be used as the right-of-way for the line. There are 5 people living on this road and he is worried about the condition. He and his neighbors maintain the road and he says it's not in very good condition because of all the rain. It's mud now and he believes that it will only get worse with heavy maintenance equipment using it as a right-of-way also. There is also a bridge on this road that the homeowners also maintain and it is in marginal condition. He is also concerned about the heavy equipment going over the bridge.

Response to Comment 10022

The BPA Project Manager contacted Mr. Stephan to discuss road work in the Hubbard Creek area near and on Mr. Stephan's property. The unpaved roads in the vicinity of Hubbard Creek have been identified as areas that need road work. In unpaved areas along Hubbard Creek Road, BPA proposes access road improvement, reconstruction, and a culvert replacement. This culvert has been designed to meet fish passage criteria. The bridge in this area is structurally sound, except for some of the wooden decking, which is rotting. BPA would redeck the bridge with new wooden decking as part of access road work. After construction, BPA would ensure that the access roads are graded and repaired.

BRPE10023
Tristan D. Huff
Oregon State University Extension

This project is in the heart of the range of Port-Orford-cedar(POC)and crews will likely be working in affected areas affected by an introduced root pathogen, Phytophthora lateralis. this pathogen can be spread when soil is transported on equipment and vehicles. General BMPs for reducing its spread are to avoid working when the soil is wet and to wash equipment and vehicles before it is moved. Frank Betlejewski and Ellen Goheen (forest service) are both experts on these practices and how they are applied on the ground (contact info below). Ellen Goheen: egoheen@fs.fed.us Frank Betlejewski: fbetlejewski@fs.fed.us

Response to Comment 10023

BPA has contacted the U.S. Forest Service, Southwest Oregon Forest Insect and Disease Service Center (Mr. Betljewski), and the Oregon Department of Forestry, Insect and Disease Section, for information on distribution of Port-Orford-cedar root disease in the study area and on best management practices to minimize its spread. Section 3.5, Vegetation, of the EA has been updated to include this additional information. As discussed in Section 3.5, the Oregon Department of Forestry provided BPA with data on areas surveyed for infestation by Port-Orford-cedar root disease. These data were used to create maps to determine which portions of the transmission line corridor and access roads infestation likely occurs (McWilliams pers. comm.). While dead Port Orford cedar are known to occur throughout the study area, there are a few areas where dead Port Orford Cedar were not mapped by the Oregon Department of Forestry. These areas may not be infested or may not have as much infestation as other portions of the study area. These include work areas near Willow Creek and Boulder Creek (Line Miles 17 and 18), Rocky Creek and Beartrap Creek (Line Miles 30 and 31), Obrien Creek and Gillman Creek (Line Miles 37–40), and Edson Creek (Line Miles 43–45).

The U.S. Forest Service and the U.S. Bureau of Land Management have identified best management practices that would minimize the spread of the pathogen. Best management practices that are relevant to Rebuild Project activities include:

- cleaning equipment and vehicles before moving from a contaminated watershed to an uncontaminated watershed;
- working during the dry season as much as possible;
- designating access to and egress from work areas; and
- using wash stations to clean equipment prior to moving it into new areas.

BPA would follow these best management practices throughout Rebuild Project activities, minimizing the spread of Port-Orford-cedar root disease during access road work and structure construction. Because danger tree removal is limited to individual trees or small clumps of trees, logging equipment would not be used and trees would be cut using a chain saw. Workers would walk into areas, cut trees, and not disturb roots, minimizing soil disturbance at the base of trees. BPA would install and maintain gates, further limiting access to the roads in the study area by unauthorized users and ATVs, which could transport soils on vehicles. With the implementation of best management practices to avoid or limit spread of the pathogen, impacts on vegetation from the spread of Port-Orford-cedar root disease would be low to moderate.

BRPE10024
Brenda Dumcomb

BONNEVILLE POWER ADMINISTRATION

Proposed Bandon-Rogue Transmission Line Rebuild Project

Does the preliminary EA analyze the resources important to you?

Are there other ways to lessen potential resource impacts?

Cut the trees up. Clean up the limbs.

Other comments?

I JUST want any trees cut down to be left for us. It would be great if they could be cut in approximately 24" lengths.

Thank you so much!

Name: Brenda Duncombe

Response to Comment 10024

BPA has contacted the commenter and is working to accommodate the commenter's request.

BRPE10025
Jonathan Benjamin

Jonathan Benjamin, called on 3/10/11 to comment on:

10025-1 1) Mr Benjamin is concerned about the use of herbicide when maintaining vegetation in the transmission rights of way, because they have the ability to enter local water sources where they can be consumed by local resident s that use this as their primary drinking water source.

10025-2 2) Mr Benjamin is particularly concerned about the segment of the Bandon Rogue transmission line that will transect his property, which is located along Brushes Creek. Mr Benjamin is a commercial tree farmer and his tree farm is on both sides of Brushes Creek. the Bandon Rogue transmission line will also cross his tree farm and Brushes Creek.

3) Mr Benjamin called because he was concerned his comments would not be entered into the public comment record if he waited to submit them by mail or over the internet.

Response to Comment 10025-1

Guidance and policies regarding the use of herbicides by BPA are found in the *Transmission System Vegetation Management Program Environmental Impact Statement* (Vegetation Management EIS). This document is available electronically on BPA's website: http://efw.bpa.gov/environmental_services/Document_Library/Vegetation_Management/FEIS0285.pdf; hardcopies are available by calling BPA's toll-free document request line: 1-888-276-7790. As discussed on pages 64 and 65 of the Vegetation Management EIS, BPA implements a 50-foot buffer around domestic water sources when using any herbicide. Property owners should notify BPA of drinking water sources so that this buffer can be implemented. The buffer is larger for herbicides that carry groundwater/surface water advisories (soil-active), but we do not use any herbicides with this designation on this right-of-way. The method of chemical spraying that BPA uses minimizes drift during application. We do not aerial broadcast spray; instead, targeted spot spraying minimizes the area where spraying is needed. The chemical is combined with surfactants to increase droplet size, which decreases the potential for drift into nearby water. We are able to target the weeds and not kill adjacent desirable vegetation.

BPA is willing to discuss herbicide applications on an individual basis to address any concerns over their use. You may contact the project manager for this project to obtain additional information and to discuss your concerns.

Response to Comment 10025-2

BPA has been unable to locate this property. BPA sent an e-mail to Mr. Benjamin requesting the location of this property and has not received a reply. BPA checked lands records and property owner information and does not have this landowner on current lists. It may be that the tree farm is listed under a business name. The landowner along Brush Creek is a timber company that BPA is currently working with. If BPA receives contact information from Mr. Benjamin, he will be contacted to discuss his concerns.

BRPE10026
Ned and Susan Egen

To: Bonneville Power Administration (BPA)

From:

Mailing address:

Re.: Bandon-Rogue Transmission Line Rebuild Project

Date: Mar 6, 2011

The BPA transmission illegally crosses our property.

Several years ago I contacted BPA regarding running the power lines underground for 200 feet so we wouldn't see these lines as we look towards the ocean from our proposed building site. At that time I inquired about the legality of BPA from using our property for these lines and BPA responded by sending me their ancient contract. As I read the contract, it plainly stated that BPA has the authority to run their lines through our property "following the road". That road is the Old Costal Highway, now called Coy Creek Road, which does bisect our property.

The BPA lines do run through our property, but they clearly do not follow the road. The location of the lines was illegal when they were first installed and remain illegal to this day. One cannot grandfather in an illegal action.

Furthermore, should any heavy equipment enter our property to service these lines, they would have to drive over the leach field for our septic system, installed prior to our purchasing the property.

This letter is to inform you that should you intend to rebuild these lines on our property in their present location, we intend to get an injunction to halt the project, and we would have no choice but to bring a lawsuit against BPA in an attempt to rectify the illegal actions of years ago. Should you rebuild the lines through our property I would hope you would do so by following the original contract and move the lines to the location that runs through our property and follows the road.

Thank You,

Ned Egen

Susan Egen

Response to Comment 10026

Mr. and Mrs. Egen were contacted via phone by a BPA lands specialist regarding their comment. It was determined that the transmission line discussed in their comment is not a BPA transmission line. The Bandon-Rogue transmission line does not cross the Egen's property. Therefore, further response to this comment is not needed.

BRPE10027
Richard McGee

10027-1 Proposed Bandon-Rogue Transmission line Gentlemen: I realize my comment is late for email comment. However, I wanted to point out two major issues that BPA seems to be ignoring or unaware. 1) We have a family of spotted owls living in our valley here, Brush creek drainage. The avian's appeared when BLM and Southcoast Lumber preformed their normal wasteful act of thinning trees for no purpose. Both allow the material to lay on the ground as fuel for an up hill slope fire, please do no do the same thing. Chipping or removing the downed timber makes more sense. 2 Adults and 1 juvenile have been observed. 2) Each time you or your contractor have preformed line maintenance (tree brush clearing), BPA and it contractors have spread Gorse! That is correct, carried on your equipment. You've been asked by South coast and myself previously to remove the outbreak you caused in area where none resided previously. Please take care of your problem. After all you will be working right in the middle of your gorse mess. Further if I find more gorse plants on my property carried by the wind from your activities, I would appreciate compensation for my family doing your job to remove the gorse or ensuring you have a crew check every two to three years, for the next ten years, to verify you have not spread a noxious plant as in the past. Thank you!

10027-2

Response to Comment 10027-1

Thank you for providing this information and the photograph of an owl observed on your property. BPA's wildlife biologists identified the owl in the photograph as either a northern spotted owl or a barred owl, but could not provide positive identification because of the lack of light. Both species of owls often hunt in recently thinned areas because of the availability of prey species. Assuming the owl is a northern spotted owl, the potential presence of this species along the transmission line corridor is acknowledged in Section 3.10, Wildlife, of the EA. As discussed in that section, suitable spotted owl habitat has been identified in the project vicinity. More specifically, suitable northern spotted owl nesting habitat has been identified approximately 1 mile from the commenter's property. Given that the territory of a northern spotted owl extends for miles around its nest site, if these owls are nesting in the nearby suitable nesting habitat, it is likely that they have also visited your wooded property. Potential impacts on northern spotted owl from the Proposed Action are discussed in Section 3.10.2 of the EA, and mitigation measures to avoid or reduce these impacts are identified in Section 3.10.3 of the EA. See response to Comment 10012-11 concerning cutting of danger trees along the transmission line right-of-way.

Response to Comment 10027-2

BPA contracted for a weed inventory of the transmission line right-of-way in fall 2010. The contractor, Salmonberry Restoration, mapped a dense patch of gorse on a slope, located north of Structure 33/3. This patch of gorse appears to be restricted to this one area and covers approximately 0.25 acre. It is located approximately 800 feet from your property boundary.

BPA Eugene District staff coordinate weed control activities along the transmission line right-of-way and access roads. They are now aware of this occurrence. BPA Eugene District staff plan to visit this patch to consider how best to control it, given that the slope is too steep for mechanical control. Please also see response to Comment 10012-11 concerning planned weed control along the transmission line right-of-way.

APPENDIX A

Proposed Changes to Existing Structures

This page left intentionally blank.

Proposed Changes to Existing Structures

Proposed Change	Number of Structures
Changes in Structure Type	
From 2-pole to 3-pole	6
From 3-pole to 2-pole	1
Distance from Existing Location*	
0 to 2 feet	231 ~~164~~
3 to 5 feet	27 ~~50~~
6 to 10 feet	13 ~~18~~
11 to 15 feet	1 ~~25~~
16 to 20 feet	0 ~~16~~
Over 45 ~~50~~ feet	11 ~~10~~
Changes in Structure Height	
Decrease of 25 feet	1
Decrease of 15 feet	1
Decrease of 10 feet	3
Decrease of 5 feet	3
No change	46
Increase of 5 feet	41
Increase of 10 feet	53
Increase of 15 feet	59
Increase of 20 feet	38
Increase of 25 feet	23
Increase of 30 feet	12
Increase of 35 feet	3

*Since issuance of the Preliminary Environmental Assessment, final engineering of the transmission line has resulted in some changes in the final locations of structures. As noted above, most of structures are not moving as far as previously anticipated from their original location.

This page left intentionally blank.

APPENDIX B

Other Projects in the Rebuild Project Vicinity

This page left intentionally blank.

Other Projects in the Rebuild Project Vicinity

The following recently completed and reasonably foreseeable proposed projects are within the vicinity of the Bonneville Power Administration (BPA) Bandon-Rogue Transmission Line Rebuild Project (Rebuild Project). These projects have been considered in the cumulative impact analyses for each environmental resource discussed in Chapter 3 of this EA.

Oregon Department of Transportation

The Oregon Department of Transportation's *2010–2013 State Transportation Improvement Plan* lists statewide roadway projects currently scheduled for construction over the next 3 years. The Davis Slough Repaving Project on U.S. 101 in Bandon is currently the only project in the Rebuild Project area listed for construction in 2011. This pavement preservation project would occur at the intersection of U.S. 101 and 2nd Street in Bandon, several miles northwest of the Bandon Substation and could affect the transport of workers and materials to and from construction areas along the Bandon-Rogue transmission line right-of-way.

Coos County

Coos County Road Department was asked for information on any projects planned through the end of the current fiscal year, which runs to June 2011, and for fiscal year 2012. No information was available on projects that might be proposed.

Curry County

Aside from minor maintenance projects conducted on an as-needed basis, Curry County has no current plans for roadway projects in the Rebuild Project area. These routine maintenance efforts would require only a few hours to complete and would not have any significant impacts on the environment or on the Rebuild Project. (Crumley pers. comm.)

Additionally, Curry County adopted a Destination Resort Ordinance, which allows for resort development in specified areas. Since the ordinance was adopted in June 2010, one application for a resort has been filed. The site for this proposed resort is not the in Rebuild Project area. (Pratt pers. comm.)

BPA Projects

BPA has undertaken several other projects along or near the transmission line corridor that includes the Bandon-Rogue transmission line right-of-way and the BPA Fairview-Rogue transmission line right-of-way**.**

BPA Fairview-Rogue Transmission Line Access Roads Maintenance Project

The Fairview-Rogue Transmission Line Access Roads Maintenance Project began in the summer of 2010 and will continue in 2011. As part of this project, BPA is conducting road maintenance along existing roads within the southern portion of the Fairview-Rogue and Bandon-Rogue transmission line corridor. The project meets the need for safe and reliable roads to access

transmission line structures for routine and emergency maintenance. Activities include improving approximately 11 miles of road, which involves surface grading and shaping of the existing road surface. It also includes reconstructing approximately 12 miles of road, which involves more extensive road work related to restoring the road bed. One new culvert will be installed and several culverts will be replaced. Two bridges have been installed. A Categorical Exclusion was completed to satisfy compliance with National Environmental Policy Act (NEPA).

BPA Fairview-Rogue Transmission Line Ground Wire Placement Project

The Fairview-Rogue Transmission Line Ground Wire Replacement Project took place during the summer and fall of 2010. BPA replaced overhead ground wire on four of the Fairview-Rouge transmission line structures near the Rogue Substation. Ground wires are attached to the top of structures to prevent lightning damage to substation electrical equipment by routing electricity to the ground. The project was needed because the existing ground wire was corroded and could no longer function to prevent damage to electrical equipment in the Rogue Substation. Activities included construction of a temporary access road, installation and removal of five temporary guard structures, and removal and replacement of two existing overhead ground wires and their supporting hardware. A Categorical Exclusion was completed to satisfy compliance with NEPA.

BPA Rogue–Gold Beach Rebuild Project

The Rogue-Gold Beach Rebuild Project took place in 2009 and 2010. BPA rebuilt the wood-pole structures along approximately 5.5 miles of the 115-kilovolt Rogue–Gold Beach transmission line, immediately to the south of the Bandon-Rogue transmission line. Access roads were improved or reconstructed. A Categorical Exclusion was completed to satisfy compliance with NEPA.

BPA Ongoing Vegetation Management

BPA conducts periodic vegetation management activities within the Bandon-Rogue, ~~and~~ Fairview-Rogue, and Rogue-Gold Beach transmission line corridors. In recent years BPA's periodic vegetation management activities have included the control of weeds and removal of vegetation that was growing too close to transmission line facilities. Supplement Analyses to BPA's *Vegetation Management Program Final Environmental Impact Statement* (Bonneville Power Administration 2000) have been completed to satisfy compliance with NEPA. Most recently, BPA completed a Supplemental Analysis for vegetation management activities proposed for 2011 (Bonneville Power Administration 2011). As indicated in the most recent Supplement~~al~~ Analysis, BPA is proposing to remove tall-growing and noxious vegetation growing within the right-of-way. Vegetation removal will be conducted using methods such as handcutting, mowing, and herbicide treatments. BPA will dispose of the debris using a combination of lop and scatter, mechanical chipping, and mulching. To stabilize traveled surfaces, BPA will reseed disturbed soils using a native seeds mix. These sites are monitored for germination success, and follow-up reseeding will be conducted as necessary to ensure site stabilization.

References

Bonneville Power Administration. 2000. *Vegetation Management Program Final Environmental Impact Statement*. USDOE/BPA EIS-0285.

Bonneville Power Administration, 2011. *Supplement Analysis for the Transmission System Vegetation Management Program Final Environmental Impact Statement* (DOE/EIS-0285/SA-441-Fairview-Rogue #1, Bandon-Rogue #1, and Rogue-Gold Beach #1 & #2 Transmission Line Corridors).

Crumley, Dan. Director. Curry County Road Department, Gold Beach, OR. June 3, 2010—phone call with Kevin Gifford, ICF International, regarding Curry County roadway projects planned within the Rebuild Project area.

Pratt, David J. Public Services/Planning Director. Curry County Public Services, Gold Beach, OR. January 16 and 18, 2011—email to Kevin Gifford, ICF International, regarding Curry County projects planned within the Rebuild Project area.

This page left intentionally blank.

APPENDIX C

Vegetation Data Tables

This page left intentionally blank.

Table C-1. Bandon-Rogue Transmission Line Vegetation Characterization

Line Mile	Vegetation Types	Comments
1	Coastal shrub-scrub and forest	Cranberry fields, gorse, Bandon Substation, Rosa Creek
2	Coastal shrub-scrub and forest	Cranberry fields, gorse, Johnson Creek
3	Coastal shrub-scrub, forest, riparian, and wetland areas	Cranberry fields, gorse, Crooked Creek
4	Coastal shrub-scrub and forest	Cranberry fields, gorse, gravel pit, pasture, China Creek
5	Coastal shrub-scrub, forest, riparian, and wetland areas	Forest, gorse, wet pasture, golf course
6	Coastal shrub-scrub, forest, riparian, and wetland areas	Cranberry fields, gorse, wet swales, Twomile Creek
7	Coastal shrub-scrub, forest, riparian, and wetland areas	Cranberry fields, gorse, heavily grazed pasture, wet swales, shrub-scrub
8	Mixed coniferous/evergreen broadleaf forest, riparian, and wetland areas	Agriculture, gorse, shrub-scrub, Fourmile Creek
9	Mixed coniferous/evergreen broadleaf forest, riparian, and wetland areas	Gorse, shrub-scrub, residential, steep dry slopes
10	Upland pasture	Upland pasture, shrub-scrub, gorse, hay field
11	Upland pasture, riparian, and wetland areas	Upland pasture, shrub-scrub, forest, Bethel Creek, Coos/Curry county line
12	Upland pasture	Pasture, steep dry rocky slopes, Morton Creek
13	Upland pasture, riparian, and wetland areas	Pasture, wet swales, shrub-scrub
14	Upland pasture	Pasture, hayfields, wet swales, Floras Creek
15	Upland pasture	Pasture, heavily grazed, shrub-scrub, forest, Langlois Substation
16	Upland pasture, riparian, and wetland areas	Pasture, shrub-scrub
17	Upland pasture and mixed coniferous/evergreen broadleaf forest	Young forest, pasture
18	Upland pasture and mixed coniferous/evergreen broadleaf forest	Shrub-scrub, gorse, clearcuts, steep ravines, Boulder Creek
19	Mixed coniferous/evergreen broadleaf forest	Shrub-scrub, clearcuts, spruce stand, alder stand, steep, dry ridge
20	Mixed coniferous/evergreen broadleaf forest, riparian, and wetland areas	Clearcut, steep, dry ridge, pasture, Crystal Creek

Line Mile	Vegetation Types	Comments
21	Mixed coniferous/evergreen broadleaf forest, riparian, and wetland areas	Tree farm, steep slopes, pasture, Sixes Creek
22	Coastal shrub-scrub, forest, and mixed coniferous/evergreen broadleaf forest	Cranberry fields, clearcuts, gorse, lawn, western lily occurrence
23	Coastal shrub-scrub, forest, and mixed coniferous/evergreen broadleaf forest	Gorse, dense forest, steep slopes
24	Mixed coniferous/evergreen broadleaf forest, riparian, and wetland areas	Dense gorse, pasture, dense forest, Elk River, Port Orford Substation
25	Mixed coniferous/evergreen broadleaf forest, riparian, and wetland areas	Clearcut, gorse, mature forest, steep slopes, Bagley Creek
26	Mixed coniferous/evergreen broadleaf forest, riparian, and wetland areas	Dense gorse, young forest, shrub scrub, tree farm
27	Mixed coniferous/evergreen broadleaf forest, riparian, and wetland areas	Clearcut, shrub-scrub, mature forest, steep dry slopes, Hubbard Creek, China Mt. Road
28	Mixed coniferous/evergreen broadleaf forest	Forest, steep dry ridge, China Mt. Road
29	Mixed coniferous/evergreen broadleaf forest	Forest, clearcut, steep dry ridge, tree farm, China Mt. Road
30	Mixed coniferous/evergreen broadleaf forest	Forest, clearcut, steep dry ridge, residences, China Mt. Road
31	Mixed coniferous/evergreen broadleaf forest and riparian and wetland areas	Humbug Mountain State Park, forest, gorse, steep dry slopes, pond, Brush Creek
32	Mixed coniferous/evergreen broadleaf forest, riparian, and wetland areas	BLM parcel, forest, steep dry slopes, Beartrap Creek
33	Mixed coniferous/evergreen broadleaf forest, riparian, and wetland areas	Tree farm, shrub-scrub, steep dry slopes, grasslands, forest, Brush Creek
34	Upland pasture, mixed coniferous/evergreen broadleaf forest, riparian, and wetland areas	Forest, pasture, shrub-scrub
35	Upland pasture and mixed coniferous/evergreen broadleaf forest	Pasture, forest, steep dry slopes
36	Mixed coniferous/evergreen broadleaf forest, riparian, and wetland areas	Steep dry forest, Mussel Creek
37	Mixed coniferous/evergreen broadleaf forest	Steep dry forest, clearcuts, shrub-scrub, Mussel Creek
38	Mixed coniferous/evergreen broadleaf forest	Steep dry young forest, shrub-scrub
39	Mixed coniferous/evergreen broadleaf forest, riparian, and wetland areas	Young forest, pasture, shrub-scrub
40	Upland pasture, mixed coniferous/evergreen broadleaf forest, riparian, and wetland areas	Steep dry forest, clearcut, wet, dry pasture, shrub-scrub, Euchre Creek

Line Mile	Vegetation Types	Comments
41	Mixed coniferous/evergreen broadleaf forest, riparian, and wetland areas	Mature forest, steep slopes, residences
42	Mixed coniferous/evergreen broadleaf forest	Tree farm, clearcut, steep dry slopes, forest
43	Mixed coniferous/evergreen broadleaf forest	Tree farm, clearcut, mature forest
44	Mixed coniferous/evergreen broadleaf forest	Clearcut, shrub-scrub, steep slopes
45	Upland forest and mixed coniferous/evergreen broadleaf forest	Pasture, young forest, shrub scrub, steep slopes
46	Upland pasture, riparian, and wetland areas	Pasture, forest, shrub-scrub, disturbed areas, Edson Creek, Rogue Substation

Table C-2. Common Plant Species in the Rebuild Project Area

Common Name	Scientific Name
Trees	
Big-leaf maple	*Acer macrophyllum*
Port Orford cedar	*Chamaecyparus lawsoniana*
Tanoak	*Lithocarpus densiflorus*
Sitka spruce	*Picea sitchensis*
Shore pine	*Pinus contorta*
Douglas-fir	*Pseudotsuga menziesii*
Western hemlock	*Tsuga heterophylla*
California laurel	*Umbellularia californica*
Shrubs	
Coyotebrush	*Baccharis pilularis*
Scotch broom	*Cytisus scoparius*
Salal	*Gautheria shallon*
Cascara buckthorn	*Frangula (Rhamnus) purshiana*
California wax myrtle	*Morella (Myrica) californica*
Pacific rhododendron	*Rhododendron macrophyllum*
Himalayan blackberry	*Rubus armeniacus (discolor)*
Thimbleberry	*Rubus parviflorus*
Salmonberry	*Rubus spectabilis*
Red elderberry	*Sambucus racemosa*
Pacific poison oak	*Toxicodendron diversilobum*
Gorse	*Ulex europaeus*
Evergreen huckleberry	*Vaccinium ovatum*
Forbs	
Deer fern	*Blechnum spicant*
Siberian springbeauty	*Claytonia sibirica*
Purple foxglove	*Digitalis purpurea*
Douglas iris	*Iris douglasiana*
Skunk cabbage	*Lysichiton americanum*
Water parsley	*Oenanthe sarmentosa*
Narrowleaf swordfern	*Polystichum imbricans*

Common Name	Scientific Name
Western swordfern	*Polystichum munitum*
Western brackenfern	*Pteridium aquilinum*
Grasses	
Sweet vernalgrass	*Anthoxanthum odoratum*
Brome species	*Bromus spp.*
Pacific reedgrass	*Calamagrostis nutkaensis*
Slough sedge	*Carex obnupta*
Orchardgrass	*Dactylis glomerata*
California oatgrass	*Danthonia californica*
Red fescue	*Festuca rubra*
Common velvetgrass	*Holcus lanatus*

Table C-3. Weed Species Classification and Coverage in the Right-of-Way

Common Name	*Scientific Name*	Oregon Department of Agriculture Class[1] and Abundance Estimate by County	Gross Acre Coverage	Net Acre Coverage
Bull thistle	*Circium vulgare*	B Coos: Abundant Curry: Abundant	107.0	0.6
Canada thistle	*Circium arvense*	B Coos: Abundant Curry: Abundant	42.1	0.8
English ivy	*Hedera helix*	B Coos: Not known Curry: Limited	0.01	.002
French broom	*Genista monspessulana*	B Coos: Limited Curry: Abundant	1.3	0.6
Gorse	*Ulex europaeus*	B, T Coos: Limited Curry: Abundant	172.1	80.1
Himalayan blackberry	*Rubus discolor, procerus, and armeniacus*	B Coos: Abundant Curry: Abundant	66.1	7.2
Italian thistle	*Carduus pycnocephalus*	B Coos: Abundant Curry: Limited	68.6	0.5
Japanese knotweed	*Polygonum cuspidatum*	B Coos: Limited Curry: Limited	0.1	0.1
Jubata/pampas grass	*Cortaderia sellona*	B Coos: Limited Curry: Abundant	0.7	0.04
Scotch broom	*Cytisus scoparius*	B Coos: Limited Curry: Abundant	104.0	3.3
Spanish or Portuguese heath or heather	*Erica lusitanica*	A Coos: Information not available Curry: Limited	4.0	0.1
Tansy ragwort	*Senecio Jacobean*	B, T Coos: Abundant Curry: Abundant	140.3	1.0

[1] "A" list designated weeds are weeds of known economic importance that occur in the state in small enough infestations to make eradication or containment possible. The recommended action for infestations is eradication or intensive control when and where found. "B" list designated weeds are weeds of economic importance that are regionally abundant but may have limited distribution in some counties. Recommended control actions are limited to intensive control at the state, county, or regional level as determined on a site-specific, case-by-case basis. Weeds on the "T" list are priority species for prevention and control by the Noxious Weed Control Program because they pose an economic threat to the state of Oregon.

APPENDIX D

Bandon-Rogue Transmission Line Rebuild Project
Weed Management Plan

This page left intentionally blank.

BANDON-ROGUE TRANSMISSION LINE REBUILD PROJECT

~~DRAFT~~ WEED MANAGEMENT PLAN

Prepared by:
Bonneville Power Administration

~~January~~ April 2011

Table of Contents

INTRODUCTION **1**

PUBLIC COMMENTS AND CONCERNS REGARDING WEEDS **3**

MITIGATION MEASURES RELATED TO WEEDS ..... **4~~3~~**

WEED SURVEYS: PRE- AND POST-CONSTRUCTION ..... 4~~3~~

REBUILD PROJECT CONSTRUCTION PRACTICES 4

COMMUNICATION DURING CONSTRUCTION TO ADDRESS CONCERNS ..... 5~~4~~

PROPOSED WEED CONTROL ..... 5~~4~~

LIMITING CONSTRUCTION DISTURBANCE AREAS ..... 6~~5~~

REVEGETATION OF DISTURBED AREAS ..... 6~~5~~

WEED CONTROL IN SENSITIVE AREAS ..... 7~~6~~

BASELINE DATA FOR WEED SPECIES ..... **8~~6~~**

PROJECT AREA VEGETATION MANAGEMENT ..... **11~~9~~**

PROPOSED CONTROL METHODS ..... **12~~10~~**

MANUAL METHODS ..... 12~~10~~

MECHANICAL METHODS ..... 13~~11~~

CHEMICAL CONTROL METHODS ..... 13~~11~~

POST-CONSTRUCTION WEED CONTROL ..... **15~~13~~**

REFERENCES ..... **15~~13~~**

List of Tables and Figures

Tables

TABLE 1. WEED SPECIES CLASSIFICATION AND COVERAGE IN THE RIGHT-OF-WAY[1] ..... 9~~7~~

TABLE 2. PROPOSED CONTROL METHODS OF WEED SPECIES ..... 14~~12~~

Figures

FIGURE 1. REBUILD PROJECT VICINITY MAP 2

Introduction

The Bonneville Power Administration (BPA) proposes to rebuild the existing 115-kilovolt (kV) Bandon-Rogue transmission line, owned and operated by BPA (Rebuild Project). The transmission line extends south from the existing BPA Bandon Substation, located within the city of Bandon, Oregon, to the existing BPA Rogue Substation, located near the town of Nesika Beach, Oregon. The 46-mile-long transmission line roughly parallels U.S. Highway 101 and is within 0.5 to 5 miles of the Pacific Coast, depending on the location (Figure 1). The northern portion of the transmission line, approximately 12 miles in length, is located in Coos County, and the remaining 34 miles are located in Curry County.

The purpose of this ~~Draft~~ Weed Management Plan (Weed Plan) is to control weeds and prevent inadvertent spread and introduction of weeds that could result from Rebuild Project activities. The Weed Plan includes:

- baseline information on known weed occurrences in the Rebuild Project right-of-way;
- actions that would be taken to minimize spread and control infestations including construction best management practices, control actions (physical, cultural, biological, and chemical methods) both pre- and post-construction; and
- actions that would be taken to monitor the weeds in Rebuild Project construction work areas after Rebuild Project implementation.

Work conducted during the Rebuild Project would include removing and replacing existing transmission line structures (structures), adding 19 new structures to the transmission line, conducting work on some existing access roads (including installation of culverts and building less than 1 mile of new access roads), and removing danger trees. The rebuilt transmission line would continue to operate at 115 kV and would be similar to the existing transmission line, consisting of H-frame wood poles. The rebuilt transmission line would be located within the same alignment and would not require the acquisition of any new transmission line right-of-way.

During and following construction, noxious weeds could spread and colonize disturbed areas. Construction equipment, vehicles, workers, and materials contaminated with seeds, roots, and other weed parts could spread weeds from one construction work area to another. Bare, disturbed, and compacted soils are vulnerable to weed invasion through natural seed dispersal, such as wind-blown seeds. The introduction of weeds such as gorse and various broom species has displaced native plant species and degraded vegetation communities in the project area.

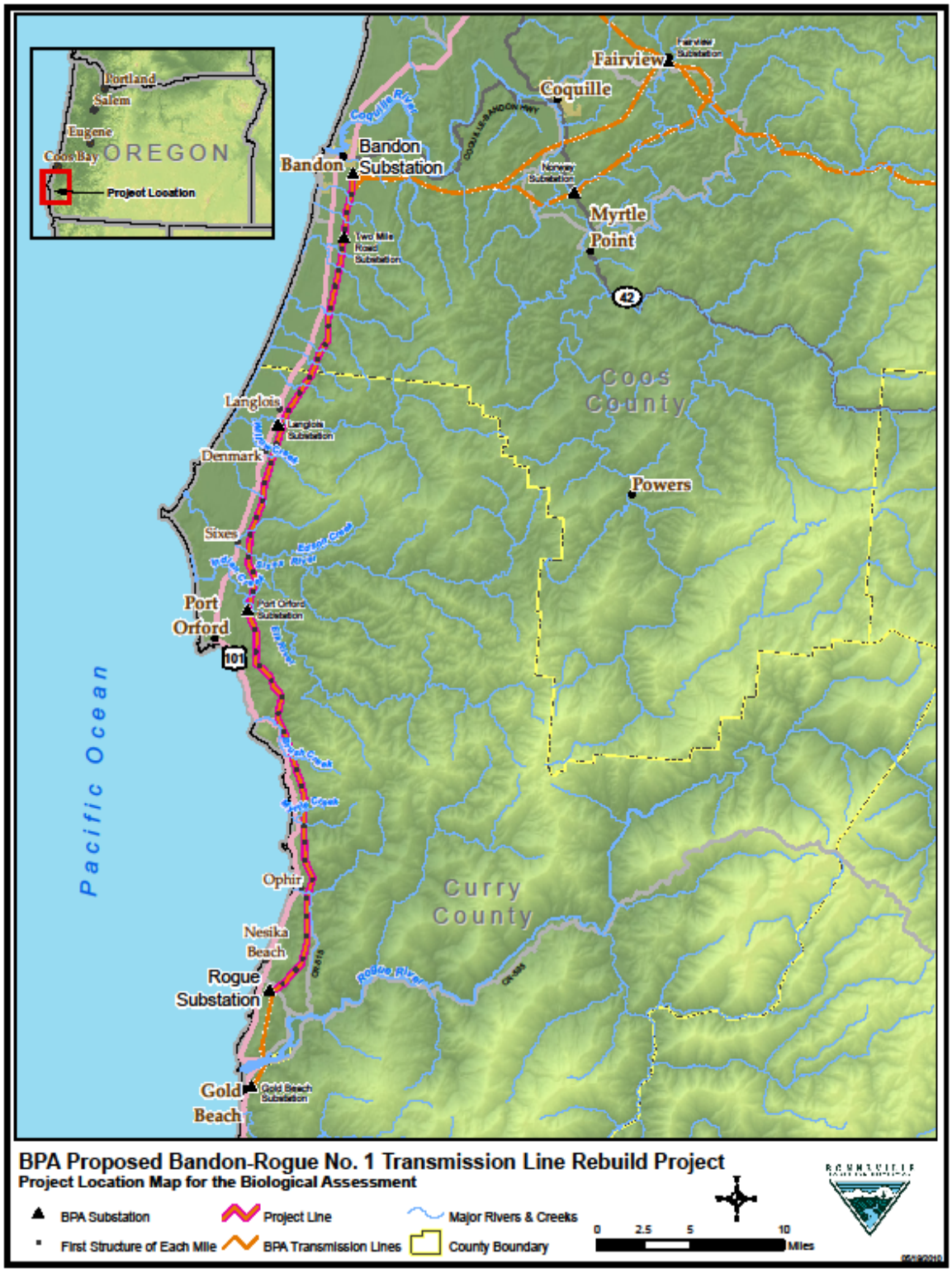

Figure 1. Rebuild Project Vicinity Map

BPA ~~is currently~~ conducted~~ing~~ an environmental review of the Rebuild Project and ~~has~~ prepared a ~~Preliminary~~ Final Environmental Assessment (~~Preliminary~~ EA), pursuant to regulations implementing the National Environmental Policy Act (NEPA), which requires federal agencies to assess the impacts their actions could~~may~~ have on the environment. The ~~Preliminary~~ EA contains a detailed project description, analysis of effects, and other project information. The EA and other project information are available at:

http://www.efw.bpa.gov/environmental_services/Document_Library/Bandon-Rogue_Rebuild.

Public Comments and Concerns Regarding Weeds

During the scoping process for the Rebuild Project, BPA conducted public outreach through various means, and received written and oral comments from landowners, state agencies, federal agencies, and tribes during the comment period. BPA received comments about the introduction and spread of invasive species from landowners and public agencies. Comments included questions on current BPA weed management practices. BPA received requests to control and prevent weed spread during Rebuild Project implementation. Specific comments included:

- need to prevent general public access to access roads to prevent weed spread;
- need to prevent the introduction and spread of weeds onto farmland;
- need to control gorse, extent of gorse invasion, recommended gorse control measures, and gorse as a potential fire hazard and problem for wildlife; and
- requests that BPA conduct a baseline study of weed occurrence before construction, create a weed management plan, ask stakeholders for comment on the Weed Plan, and conduct regular assessments of weed presence and control.

The Preliminary EA was distributed for public comment in February and March of 2011, BPA received comments on weeds from landowners and the Oregon Department of Fish and Wildlife. Chapter 8 of the Final EA contains comments received and BPA's response. BPA received requests to control and prevent spread during Rebuild Project implementation. Comments included:

- a request to conduct the post-construction weed inventory 1 year after construction, rather than 2 years after construction, as proposed;
- the suggestion that annual weed inspection and annual weed control would be needed following construction;
- questions about weed wash station locations, a request to move one to prevent access obstruction to a residence, and questions on where weed wash station water would be disposed;
- the assertion that BPA needs to gain authorization from landowners to put weed wash stations on BPA easements within their land;
- acknowledgement of the need to seed disturbed areas to prevent weed invasion and suggestion that a perennial grass seed be included in the seed mix;
- information on a specific area infested with gorse;

- statement that all equipment should be washed prior to entering work areas, including chain saws;
- statement that rock and gravel used for road work should be obtained from a weed-free source; and
- concerns about the frequency of treatment and requests for several visits to apply chemicals in 1 year to ensure that weeds are killed.

Mitigation Measures Related to Weeds

Based on the comments received, weeds were considered as a very important issue during the environmental review process. Discussion of weeds is found in various sections within Chapter 3 of the ~~Preliminary~~ EA. In the vegetation section of the ~~Preliminary~~ EA (Section 3.5), it was concluded that because weeds are plentiful in the project area and ground-disturbing activities would open up new areas for weed infestation, impacts on vegetation from weed species could be moderate to high without appropriate mitigation. The following mitigation measures that relate to weeds are proposed in the ~~Preliminary~~ EA to avoid or minimize the effects of the Rebuild Project on weed occurrence and spread (See ~~Preliminary~~ EA, Section 3.5).

Weed Surveys: Pre- and Post-Construction

Weed surveys provide information on weed occurrence at one point in time. A pre~~-~~construction weed survey helps determine where weeds occur so that pre-construction weed control can target weed occurrence that, without a survey, might not be known. A post-construction survey can be compared to the preconstruction survey to determine if existing weeds have spread and if any new weeds have been introduced. The following weed surveys have been or would be conducted for the Rebuild Project:

- Survey the Bandon-Rogue right-of-way for weed occurrence in fall 2010, mapping locations and estimating density of weed species (completed by Salmonberry Restoration in 2010).
- Survey Rebuild Project access roads for weed occurrence in spring 2011 and implement appropriate type and level of weed control for weed species that respond to spring or summer treatment during the survey or shortly thereafter.
- Conduct a post-construction weed survey, 1~~2~~ year~~s~~ after construction, of all areas disturbed by Rebuild Project construction activities to determine if there are new weed infestations; and implement appropriate control measures of weed infestations.

Rebuild Project Construction Practices

To avoid spreading or introducing new weed species into and between Rebuild Project construction work areas, ~~the project area,~~ the following specific construction practices would be implemented.

- ~~Provide~~ Meet with construction contractors prior to construction ~~training on the~~and explain required actions to prevent weed introduction and spread~~identification of noxious weed species that occur in the project area and explain required actions to prevent their spread~~.

- ~~Install vehicle and equipment wash stations (water and compressed air) in each work area near where pavement ends and gravel or dirt access roads begin to minimize spread of weeds; mandate use of wash stations for vehicles and equipment entering and leaving each work area; prohibit discharge of vehicle wash water into any stream or other waterbody or wetland.~~
- Install and use vehicle and equipment wash stations to minimize spread of weeds and Port-Orford-cedar root disease, preferable near where pavement ends and gravel or dirt access roads begin, if feasible[1]; use wash stations to clean vehicles and equipment prior to entering and leaving each work area; and prohibit discharge of vehicle wash water into any stream, waterbody, or wetland.
- Obtain road fill materials from weed-free quarries.

Communication during Construction to Address Concerns

To ensure that landowners and other interested parties have an opportunity to discuss concerns regarding weed occurrence and control with BPA staff and the construction contractor before and during construction, the following mitigation measures ~~were~~ are included in the ~~Preliminary~~ Final EA.

- Conduct a preconstruction public meeting and invite landowners and other interested parties to meet with contractors and BPA staff responsible for project implementation and receive information and discuss concerns.
- Provide appropriate contact information for contractor liaisons and BPA staff to local residents for any concerns or complaints during construction.

Proposed Weed Control

General mitigation measures that relate to weed control are listed below. More specific methods to control weeds are listed ~~in~~under the ~~Weed~~ Proposed Control Methods section below.

- Control weeds prior to construction, with a focus on species with small, contained infestations to reduce the potential for widespread establishment and the need for long-term management; weed species identified as occurring in discrete locations with the potential to radiate from these locations include Spanish heath, English ivy, knotweed, and pampas grass.
- Survey Rebuild Project access roads for weed occurrence in spring 2011; treat weeds that respond to spring treatment during the survey or shortly thereafter.
- Conduct a post-construction weed survey, ~~2~~ 1 year~~s~~ after construction, of all areas disturbed by Rebuild Project construction activities to determine if there are new weed infestations; implement appropriate control measures of weed infestations.

---

[1] Finding suitable locations for wash stations in all work areas is not possible due to the presence of wetlands, waterways and steep topography. If wash stations could not be situated along each access road leading to work areas, equipment would be washed prior to entering work areas and as soon as possible after leaving work areas, at the nearest wash station location.

- Conduct weed control in riparian areas using procedures that prevent the introduction of toxic herbicides into aquatic areas, and use herbicides approved for use near aquatic areas.

Limiting Construction Disturbance Areas

The following mitigation measures relate to limiting construction disturbance areas and mimimizing erosion and sedimentation. These measures would help minimize ground disturbance, removal of existing native vegetation, and subsequent colonization of disturbed areas by weed species. In addition to these measures, BPA would install gates at appropriate locations along access roads, to prevent unauthorized access. There are already numerous gates along existing access roads, and landowners are and have been discussing these gates with BPA Realty staff and the BPA road engineer for the Rebuild Project.

- Restrict construction activities to the area needed to work effectively, to limit disturbance of native plant communities to the minimum amount necessary to prevent spread of weed species.
- Delineate construction limits within 200 feet of streams, other waterbodies, wetlands, and floodplains; manage sediment as specified in the Stormwater Pollution Prevention Plan, with an ~~sediment fence, straw wattles, or a similarly~~ approved method that meets the *Stormwater Management Manual for Western Washington* (Washington State Department of Ecology 2005) erosion and stormwater control best management practices, to eliminate sediment discharge into waterways and wetlands, minimize the size of construction disturbance areas, and minimize removal of vegetation, to the greatest extent possible.
- Inspect erosion and sediment controls weekly, maintain them as needed to ensure their continued effectiveness, and remove them from the site when vegetation is re-established and the site has been stabilized.

Revegetation of Disturbed Areas

Prompt revegetation of disturbed areas would help prevent establishment of weed species. The following revegetation would be done in all areas disturbed by Rebuild Project construction, including structure work areas within the right-of-way and along access roads where work would be performed.

- Reseed disturbed areas after construction and regrading are complete, at the appropriate time period for germination, with a native seed mix, a seed mix recommended by the Oregon Department of Fish and Wildlife, or within the *Stormwater Management Manual for Western Washington* (Washington State Department of Ecology 2005), or as agreed upon with landowners for use on their property.
- Monitor seed germination of seeded areas with at least three field visits per year until site stabilization (defined as at least 70% cover by native or acceptable nonnative species) is achieved; if vegetative cover is inadequate, implement contingency measures and reseed to ensure adequate revegetation of disturbed soils.

Weed Control in Sensitive Areas

The following weed control procedures would be followed in sensitive areas, which include riparian areas and areas where endangered western lily are known to occur.

- Conduct weed control in riparian areas using procedures that prevent the introduction of toxic herbicides into aquatic areas and use herbicides approved for use near aquatic areas.
- Remove encroaching woody vegetation species and noxious weeds in the two western lily sensitive areas using a variety of manual weed control methods and spread any vegetation removed within the vicinity of western lily sensitive areas, including wood chips, sawdust, branches, and woody debris, outside of the 25-foot buffer surrounding western lily plants.

Baseline Data for Weed Species

The Oregon Weed Board classifies noxious weeds in the following categories.

- "A" list designated weeds are weeds of known economic importance that occur in the state in small enough infestations to make eradication or containment possible. The recommended action for infestations is eradication or intensive control when and where found.
- "B" list designated weeds are weeds of economic importance that are regionally abundant but may have limited distribution in some counties. Recommended control actions are limited to intensive control at the state, county, or regional level as determined on a site-specific, case-by-case basis.
- Weeds on the "T" list are priority species for prevention and control by the Noxious Weed Control Program because they pose an economic threat to the state of Oregon.

To determine the extent of noxious weed infestation along the Bandon-Rogue right-of-way, a noxious weed survey of the transmission line corridor was conducted in September 2010 by Salmonberry Restoration, a private consulting firm. Weed species occurrence was mapped. The total acreage that each species occupies was estimated. The net acreage, which is an estimate of how much ground individuals of each weed species covers, was also estimated.

Twelve weed species were found within the transmission line corridor; information on each species and its occurrence is provided below and in Table ~~2~~1. Because Rebuild Project access roads were not surveyed for weeds in 2010, an access road weed survey would be conducted prior to construction, in spring 2011. During the 2010 weed survey, four species were noted to occur along access roads but not in the right-of-way: acacia *(Acacia sp.)*, butterfly bush *(Buddleia davidii)*, Himalayan knotweed *(Polygonum polystachyum)*, and meadow knapweed *(Centaurea pratensis)*.

Table 1. Weed Species Classification and Coverage in the Right-of-Way[1]

Common Name	Scientific Name	Oregon Department of Agriculture Class[2] and Abundance Estimate by County	Gross Acre Coverage	Net Acre Coverage
Bull thistle	*Circium vulgare*	B, T Coos: Abundant Curry: Abundant	107.0	0.6
Canada thistle	*Circium arvense*	B, T Coos: Abundant Curry: Abundant	42.1	0.8
English ivy	*Hedera helix*	B, T Coos: Not known Curry: Limited	0.01	.002
French broom	*Genista monspessulana*	B Coos: Limited Curry: Abundant	1.3	0.6
Gorse	*Ulex europaeus*	B, T Coos: Limited Curry: Abundant	172.1	80.1
Himalayan (Armenian) blackberry	*Rubus discolor, procerus, and armeniacus*	B Coos: Abundant Curry: Abundant	66.1	7.2
Italian thistle	*Carduus pycnocephalus*	B Coos: Abundant Curry: Limited	68.6	0.5
Japanese knotweed	*Polygonum cuspidatum*	B Coos: Limited Curry: Limited	0.1	0.1
Jubata/pampas grass	*Cortaderia sellona*	B Coos: Limited Curry: Abundant	0.7	0.04
Scotch or Scot's broom	*Cytisus scoparius*	B Coos: Limited Curry: Abundant	104.0	3.3
Spanish or Portuguese heath or heather	*Erica lusitanica*	A Coos: Information not available Curry: Limited	4.0	0.1
Tansy ragwort	*Senecio jacobea*	B, T Coos: Abundant Curry: Abundant	140.3	1.0

[1] Source: Oregon Department of Agriculture 2010; Salmonberry Restoration Planning 2010.

[2] "A" list designated weeds are weeds of known economic importance that occur in the state in small enough infestations to make eradication or containment possible. The recommended action for infestations is eradication or intensive control when and where found. "B" list designated weeds are weeds of economic importance that are regionally abundant but may have limited distribution in some counties. Recommended control actions are limited to intensive control at the state, county, or regional level as determined on a site-specific, case-by-case basis. Weeds on the "T" list are priority species for prevention and control by the Noxious Weed Control Program because they pose an economic threat to the state of Oregon.

Spanish heath *(Erica lusitanica)* is the only "A" list species that was found within the right-of-way. Spanish heath was found in two locations in the right-of-way, in Line Miles 8 and 12, near the town of Langlois. It is likely that Spanish heath also occurs along access roads near these two locations. The density of this species is sparse and the coverage is low. In the right-of-way, it is estimated to currently cover less than 0.2 acre. Spanish heath currently has a limited distribution; however, because it can spread rapidly, the Oregon Department of Agriculture (ODA) is concerned it could become very problematic in the South Coast.

Gorse *(Ulex europaeus)* is the most common "B" list species in the project area; it has a supplemental "T" designation. This species is very problematic in the South Coast, because it expands rapidly into dense monocultures, forming spiny thickets that function as impenetrable barriers to the movement of wildlife, vehicles, livestock, and people. Because seeds deposited in soil remain viable for many years, long-term, repeated treatment is required. The Curry County Weed Board has specifically targeted gorse and is focused on containment of the core coverage area, extending between Poverty Ridge to the north and the north side of Hubbard Creek to the south. Outside the core area, efforts to eradicate gorse using lethal treatment is recommended to prevent a gorse monoculture from developing. Gorse is found within approximately 172 acres of the right-of-way, with a net coverage of approximately 80 acres. In some areas gorse is scattered and in other areas forms monocultures that extend beyond the right-of-way, onto adjacent lands.

Himalayan or Armenian blackberry *(Rubus discolor)* is distributed throughout the project area, but is most common in the southern portion of the project area. This aggressive species grows into a monoculture that displaces other species. Because it invades riparian areas, it can degrade fish habitat. Himalayan blackberry is found within approximately 66 acres of the right-of-way, with a net coverage of approximately 7.2 acres.

Scotch and French broom (*Cytisus scoparius* and *Genista monspessulana*) are both found within the project area. Both species quickly invade disturbed areas, grow rapidly and decrease the productivity of land. Because they produce very persistent seeds, long-term control is required. Of the two species, scotch broom is the most widely scattered throughout the project area, occurring within approximately 104 acres of the right-of-way, with a net coverage of approximately 3.3 acres. French broom, a species similar in appearance to Scotch broom, is less common than Scotch broom. It is estimated to cover approximately 1.6 acres within the right-of-way, with a net coverage of approximately 0.6 acre.

Jubata grass and pampas grass *(Cortaderia jubata* and *Cortaderia selloana)* are found in four discrete locations within the right-of-way. These species escape from cultivation and crowd out native vegetation. In forests, jubata grass can out-compete seedling trees and retard their establishment and growth. Both species create a fire hazard with excessive build-up of dry leaves, leaf bases, and flowering stalks; and large clumps block vehicle access. These species cover less than 1 acre within the right-of-way, with a net coverage of approximately 0.04 acre.

Japanese knotweed *(Polygonum cuspidalum)* is found in one location in the right-of-way. A dense patch of Japanese knotweed covers approximately 4,000 feet along the south side of Hubbard Creek. Because of the invasive and persistent nature of Japanese knotweed, especially in riparian habitats, it has a supplemental "T" designation. This species covers less than 1 acre within the right-of-way, with a net coverage of approximately 0.08 acre.

Bull and Canada thistle (*Circium vulgare* and *Circium arvense*) are two common thistles found distributed in open areas throughout the project area. Both species have a "T" designation. Thistles are weeds of waste places and farmland that readily colonize open, disturbed areas and are dispersed by many wind-blown seeds. Bull thistle covers 107 acres within the right-of-way, with a net coverage of approximately 0.6 acre. Canada thistle covers 42.1 acres within the right-of-way, with a net coverage of approximately 0.8 acre.

Italian thistle *(Carduus pycnocephalus)* was found in two areas within the right-of-way: between Line Miles 8 and 15 and between Line Mile 44 and the Rogue Substation. Both of these areas are characterized by open pastures. Italian thistle infests roadsides, waste areas, and pastures. Once established, it spreads rapidly and forms dense stands, which displace more-desirable vegetation and exclude livestock. Italian thistle covers approximately 68.6 acres within the right-of-way, with a net coverage of approximately 0.5 acre.

English ivy *(Hedera helix)* is found in one location within the right-of-way, in Line Mile 27, south of Hubbard Creek, within several hundred feet of China Mountain Road. This plant displaces native vegetation, slowly advancing across landscapes, and growing up onto shrubs and trees. Once established, it is difficult to eradicate. English ivy covers approximately 0.009 acre within the right-of-way, with a net coverage of approximately 0.002 acre.

Tansy ragwort *(Senecio jacobaea)* is distributed throughout the right-of-way. This species occurs along disturbed roadsides, in pastures, and in other open areas. Because tansy ragwort is toxic to horse and cattle, it is of particular concern in pastures. Tansy ragwort covers approximately 140.3 acres within the right-of-way, with a net coverage of approximately 1.0 acre.

Project Area Vegetation Management

BPA conducts ongoing vegetation management in the project area under its Vegetation Management Program. Information on BPA's Vegetation Management Program, including weed control, can be found in the following documents:

- *Transmission System Vegetation Management Program Environmental Impact Statement* (Bonneville Power Administration 2000a); and
- *Transmission System Vegetation Management Program Record of Decision* (Bonneville Power Administration 2000b).

Physical (manual and mechanical), chemical, and biological methods of vegetation management are employed by BPA to control weeds, keep plants from interfering with

transmission lines and foster low-growing plant communities. Ongoing vegetation management activities that are conducted as part of operations and maintenance of the transmission line prevent the development of forest within the right-of-way. As a result, much of the right-of-way consists of fields dominated by nonnative herbaceous species and low shrubs or shrublands that contain of a mix of native and nonnative species. These communities are more vulnerable to invasion by weed species than forest areas, because of the lack of established trees to shade out weed species.

Proposed Control Methods

BPA proposes to use a combination of manual, mechanical, and chemical weed control methods to control weeds in the Bandon-Rogue right-of-way and along Rebuild Project access roads. Repeated control efforts, and sometimes a combination of techniques, conducted over several to many years are required to suppress aggressive and persistent weed species. BPA is working with the Curry County Weed Board and ODA concerning the control of weeds for the Rebuild Project and is developing contracts with specific weed control tasks. Baseline weed data for the right-of-way are being used to identify areas where weed control actions are needed.

Burning would not be used by BPA on the right-of-way due to the potential for arcing of electricity from the transmission line to the burn pile, a safety hazard that could harm humans and wildlife and cause fires.

Biological controls could be used by BPA in coordination with ODA. In the past, BPA has used insects to control tansy ragwort in some areas. BPA has worked with ODA to conduct tests on biological controls in some areas. Use of biological controls would be conducted in coordination with ODA.

Both manual and mechanical methods, discussed below, produce slash (i.e., cutting debris) that can be disposed of by several techniques. Plants that are cut before seeds are produced may be piled and left for enhancement of wildlife habitat (i.e., cover for small mammals) or fed through a mechanical chipper and used as mulch during revegetation procedures.

Manual Methods

Manual methods use hand labor to remove undesirable vegetation. These methods are highly selective and permit weeds to be removed without damage to surrounding native vegetation. Manually operated tools such as brush cutters, power saws, axes, machetes, loppers, and clippers can be used to cut shrubby species, such as gorse and broom. Shrubs could be controlled using manual methods by cutting on rough, steep, or stony ground that is not accessible to mowers and other equipment.

Species that would be controlled by manual methods include English ivy and pampas grass. Knotweed species are manually removed, the year following chemical treatment, if there is no evident regrowth. If there is regrowth, chemical treatment is repeated and manual removal is done the following year, after inspection for regrowth.

Mechanical Methods

Mechanical methods use mechanized equipment to remove above ground vegetation. Mechanical control is highly effective at controlling dense woody vegetation, such as gorse on gentle topography with few site obstacles such as rocks, stumps, or logs. Most mechanical equipment is not safe to operate on slopes over 30%. Gorse and broom may be trimmed back by tractor-mounted mowers on even ground or by cutting on rough or stony ground.

Species that would be controlled by mechanical methods include gorse, broom species, and Himalayan blackberry.

Chemical Control Methods

BPA does not propose to use broadcast spraying in order to avoid killing desirable native species and to avoid impacts on water quality and aquatic species. BPA uses the following chemical treatment methods.

- Spot chemical treatment consists of various techniques for manually applying herbicides to individual plants or small clumps of plants (such as stump resprouts). Spot treatment is highly selective as only specific plants are treated.
- Localized chemical treatment is done in small areas to treat patches of weeds that form monocultures; it is used for species such as Himalayan blackberry.

Table 2 includes chemicals that could be used for each weed species and the time of treatment. Species that would be controlled by chemical methods include thistles, tansy, knotweed, acacia, butterfly bush, and Himalayan blackberry. Chemical treatment of knotweed (stem injections) is done prior to manual removal of above ground plant parts. Chemical treatment of some species, such as gorse and ivy, could be done in addition to mechanical removal. Chemical control is helpful to control some weed species such as gorse that resprout from root or other plant fragments, because they may not be permanently controlled by non-chemical control.

It is likely that Spanish heath will be controlled with chemicals. Because it is an “A” list weed species, BPA is coordinating with ODA on control measures.

Table 2. Proposed Control Methods of Weed Species

Common Name	Manual Control	Mechanical Control	Chemical Control Methods and Appropriate Time to Apply
Acacia			Glyphosate Late summer/fall application
Butterfly bush			Glyphosate plus triclopyr Late summer/fall application
Bull thistle			Aminopyralid Spring/summer application
Canada thistle			Aminopyralid Spring/summer application
English ivy	X		Glyphosate plus triclopyr Fall/winter application
French broom		X	Triclopyr and Aminopyralid Spring/summer application
Gorse		X	Triclopyr and Aminopyralid Spring/summer application
Himalayan blackberry		X	Triclopyr and Aminopyralid Late summer/fall application
Italian thistle			Aminopyralid Spring/summer application
Japanese knotweed	X		Aquatic Round-up by stem injection Fall application
Jubata/pampas grass	X		Round-up Spring/summer application
Meadow knapweed			2, 4-D and triclopyr Spring application
Scotch or Scot's broom		X	Triclopyr and Aminopyralid Spring/summer application
Spanish or Portuguese heath or heather			Concentrated triclopyr and glyphosate, small amount of 2, 4-D, use surfactant Spring/summer application
Tansy ragwort			Triclopyr and Aminopyralid Spring/summer application

Post-Construction Weed Control

BPA would conduct a post-construction weed survey, 1~~2~~ year~~s~~ after construction, of all areas disturbed by Rebuild Project construction activities to determine if there are new weed infestations. Based on survey results, BPA would implement appropriate control measures of weed infestations, using manual, mechanical, and chemical methods, on an ongoing basis.

Thereafter, BPA would conduct ongoing vegetation management, including weed control, consistent with BPA's *Transmission System Vegetation Management Program Environmental Impact Statement* (Bonneville Power Administration 2000a). BPA coordinates with local weed control boards, including the Curry County Weed Board, to identify, inventory, and monitor for weeds and implement appropriate response measures. As part of routine weed control, every 4 years, manual and mechanical weed control methods would be applied within the right-of-way and along access roads. Every 2 years, spot chemical treatment of identified weeds is conducted.

References

Bonneville Power Administration. 2000a. *Transmission System Vegetation Management Program Environmental Impact Statement*. Available: <http://efw.bpa.gov/environmental_services/Document_Library/Vegetation_Management/FEIS0285.pdf>

Bonneville Power Administration. 2000b. *Transmission System Vegetation Management Program Record of Decision*. Available: <http://www.bpa.gov/corporate/pubs/RODS/2000/efw/VegROD.pdf>

Oregon Department of Agriculture. 2010. *Noxious Weed Policy and Classification System 2010*. Oregon Department of Agriculture Noxious Weed Control Program, Salem, OR. Available: <http://www.oregon.gov/ODA/PLANT/WEEDS/docs/weed_policy.pdf?ga=t>.

Salmonberry Restoration Planning. 2010. *BPA Proposed Bandon-Rogue No. 1 Transmission Line Rebuild Project Invasive Species Survey*. December. Unpublished report prepared for BPA by Salmonberry Restoration Planning, Eugene, OR.

Washington State Department of Ecology. 2005. *Stormwater Management Manual for Western Washington*. Volume II: Construction Stormwater Pollution Prevention, Publication No. 05-10-30. February. Available: <http://www.ecy.wa.gov/pubs/0510030.pdf>.

This page left intentionally blank.

APPENDIX E

Proposed Structure Installation and Access Road Work within 200 Feet of Streams

This page left intentionally blank.

Proposed Structure Installation and Access Road Work within 200 Feet of Streams and Tributary Streams

Stream	Proposed Activities
Rosa Creek	No work
Johnson Creek	Access road improvements approximately 200 feet from stream
Johnson Creek tributary	Access road reconstruction over stream, including culvert replacement; install one structure approximately 113 feet from tributary stream
Crooked Creek	No work
Crooked Creek tributaries	Access road improvement, including ~~new~~ culvert ~~installation~~replacement; install one structure approximately 110 feet from tributary stream
China Creek	No work
Twomile Creek	No work
Twomile Creek tributaries	Access road reconstruction approximately 150 feet from tributary; install one structure approximately 150 feet from tributary stream
South Twomile Creek	No work
Lower Twomile Creek	Access road improvement over stream~~, including culvert replacement~~
Lower Twomile Creek tributaries	Access road improvement and reconstruction over streams, including new culvert installation; install two structures approximately 99 and 200 feet from tributary streams
Fourmile Creek	No work
Fourmile Creek tributaries	Access road improvement and reconstruction over streams, including two culvert replacements; install two structures approximately 192 and 161 feet from tributary streams
Jenny Creek	No work
Tributary to Jenny Creek	Access road improvement and reconstruction over streams, including one culvert replacement; install one structure approximately 139 feet from tributary stream
Connor Creek and tributaries	No work
Davis Creek	No work
Bethel Creek and tributaries	Install one structure approximately 199 feet from tributary stream
Butte Creek	No work
Butte Creek tributaries	Access road improvement over streams, including five culvert replacements
Morton Creek	No work

Stream	Proposed Activities
Morton Creek tributaries	Access road improvement over streams, including one culvert replacement and installation of one new culvert; install one structure approximately 65 feet from tributary stream
Langlois Creek	Access road improvement over stream
Tributary to Langlois Creek	Access road improvement over stream; install one structure approximately 150 feet from tributary stream
Floras Creek	No work
Floras Creek tributary	Access road improvement over stream; install one structure approximately 118 feet from tributary stream
Jim Creek	No work
Tributary to Jim Creek	Install one structure approximately 155 feet from tributary stream
Willow Creek	No work
Willow Creek tributaries	Access road reconstruction over streams, including two culvert replacements, access road improvement over stream, including steel plate bridge replacement, culvert installation in headwaters tributary; install one structure which is approximately 100 feet, 159 feet, and 194 feet from three different tributary stream
Tributaries to Floras Lake	Access road improvement over stream; access road reconstruction, including three culvert replacements
Boulder Creek	Access road improvements over stream, including one culvert replacement
Boulder Creek tributaries	Install one structure approximately 180 feet from tributary stream
Crystal Creek	No work
Crystal Creek tributaries	Access road improvements over headwater tributary streams; replace four structures approximately 174, 175, 194, and 198 feet from headwater tributary streams
Sixes River	No work
Sixes River tributaries	Access road reconstruction over stream
Indian Creek	Access road reconstruction, including replacement of existing ford with new ~~arch pipe culvert~~bridge; improve ford in a tributary swale within pasture draining to Indian Creek
Elk River	Install one structure approximately 96 feet from Elk River
Elk River tributaries	Access road improvement over headwater streams, including one culvert replacement, reconstruct road over streams, including two culvert replacements; install five structures approximately 100, 143, 150, 175, and 183 feet from streams
Bagley Creek	Access road, including five culvert replacements

Stream	Proposed Activities
Bagley Creek tributaries	Install two structures approximately 200 feet form headwater tributaries
Hubbard Creek	No work
Hubbard Creek tributaries	Access road improvement near streams; access road reconstruction over stream, including one culvert replacement; install six structures approximately 99, 100, 125, 150, 170 and 200 feet from tributary streams
Brush Creek	No work
Brush Creek tributaries	Access road improvement over streams, including ~~three~~ two culvert replacements
Reinhart Creek	No work
Myrtle Creek	No work
Mussel Creek	No work
Mussel Creek tributaries	Access road reconstruction over stream, including two culvert replacements; install three structures approximately 50, 100, and 200 feet from tributary streams
Obrien Creek	No work
Obrien Creek tributaries	Install one new structure approximately 200 feet from tributary stream
Gilman Creek	No work
Euchre Creek	Install one structure approximately 125 feet from stream
Euchre Creek tributaries	Install two structures, both approximately 200 feet from tributary streams
Cedar Creek	No work
Cedar Creek tributaries	Install two structures, approximately 50 and 100 feet from tributary streams
Edson Creek	No work
Edson Creek tributaries	Install three structures, approximately 100, 110, and 200 feet from tributary streams

This page left intentionally blank.

APPENDIX F

Existing and Proposed Structures within 100 Feet of Wetlands

This page left intentionally blank.

Existing and Proposed Structures within 100 Feet of Wetlands

Existing or Additional Structure Number Near or In Wetland	Distance (feet) Between Proposed and Existing Structure	Existing Structure Approximate Distance (feet) from Wetland(s) or In Wetland	Replacement Structure Approximate Distance (feet) from Wetland(s)
1/1	Same location	In wetland	In wetland
1/2	Same location	In wetland	In wetland
1/3	Same location	In wetland	In wetland
2/3	New structure	N/A	75
3/4	Same location	50	50
3/5	Same location	8 ~~In wetland~~	8 ~~In wetland~~
4/3	Same location	20	20
4/6	Same location	15 and 40	15 and 40
5/5	Same location	20	20
7/3	Same location	25	25
7/4	73	50	100
7/6	157	3	100
7/7	New structure	N/A	91
14/4	73	25 and 30	75 and 100
15/2	Same location	In wetland	In wetland
15/2S	Same location	In wetland	In wetland
16/6	~~Additional~~ New structure	N/A	30
17/6	Same location	40	40
19/1	Same location~~5~~	25 ~~10~~	25 ~~15~~
33/2	Same location	In wetland	In wetland
34/2	228~~6~~	3 and 40 and 156	152~~0~~ and 152~~0~~ and 10
34/4	Same location	50	50
35/5	Same location	50	50
38/2	Same location	40	40
40/4	9 ~~13~~	80	71 ~~65~~
46/8	Same location	88	88

This page left intentionally blank.

APPENDIX G

Fish Species Occurrence in Rebuild Project Area Streams

This page left intentionally blank.

Fish Species Occurrence ~~and Status~~ in Rebuild Project Area Streams

Stream Name (Includes Tributaries in Project Area)	Species Present*	ESU/DPS (Federal ESA Status) OC – Oregon Coast SONCC – Southern Oregon/Northern California Coasts KMP – Klamath Mountains Province
Rosa Creek	Coastal cutthroat trout assumed	
Johnson Creek	Coho ~~Chinook salmon~~ Steelhead Coastal cutthroat trout Lamprey likely	OC ESU (Threatened). Historic population of OC coho not documented since 1990s (current status unknown). Not included in OC coho designated critical habitat or OC coho Recovery Plan. ~~OC ESU (Not Warranted)~~ OC ESU (Species of Concern)
Crooked Creek	Coastal cutthroat trout Lamprey likely	
China Creek	Coastal cutthroat trout Lamprey likely	
Twomile Creek	Coho ~~Chinook salmon~~ Steelhead Coastal cutthroat trout Pacific lamprey Western brook lamprey	OC ESU (Threatened) ~~OC ESU (Not Warranted)~~ OC DPS (Species of Concern)
Lower Twomile Creek (tributary to Twomile Creek)	Coho ~~Chinook salmon~~ Steelhead Coastal cutthroat trout Lamprey likely	OC ESU (Threatened) ~~OC ESU (Not Warranted)~~ OC DPS (Species of Concern)

Stream Name (Includes Tributaries in Project Area)	Species Present*	ESU/DPS (Federal ESA Status) OC – Oregon Coast SONCC – Southern Oregon/Northern California Coasts KMP – Klamath Mountains Province
South Twomile Creek (tributary to Twomile Creek)	Coho ~~Chinook salmon~~ Steelhead Coastal cutthroat trout Lamprey likely	OC ESU (Threatened) ~~OC ESU (Not Warranted)~~ OC DPS (Species of Concern)
Fourmile Creek (tributary to New River)	Coho ~~Chinook salmon~~ Steelhead Coastal cutthroat trout Pacific lamprey Western brook lamprey	OC ESU (Threatened) ~~OC ESU (Not Warranted)~~ OC DPS (Species of Concern)
Connor Creek (tributary to Croft Lake/New River)	Coho ~~Chinook salmon~~ Steelhead Coastal cutthroat trout	OC ESU (Threatened). No critical habitat east of Hwy 101. ~~OC ESU (Not Warranted)~~ OC DPS (Species of Concern)
Davis Creek (tributary to Croft Lake/New River)	Coho ~~Chinook salmon~~ Steelhead Coastal cutthroat trout Pacific lamprey Western brook lamprey	OC ESU (Threatened) ~~OC ESU (Not Warranted)~~ OC DPS (Species of Concern)
Bethel Creek (tributary to New River)	Coho ~~Chinook salmon~~ Steelhead Coastal cutthroat trout Pacific lamprey Western brook lamprey	OC ESU (Threatened) ~~OC ESU (Not Warranted)~~ OC DPS (Species of Concern)

Stream Name (Includes Tributaries in Project Area)	Species Present*	ESU/DPS (Federal ESA Status) OC – Oregon Coast SONCC – Southern Oregon/Northern California Coasts KMP – Klamath Mountains Province
Butte Creek (tributary to New Lake/New River)	Coho ~~Chinook salmon~~ Steelhead Coastal cutthroat trout Pacific lamprey Western brook lamprey	OC ESU (Threatened) ~~OC ESU (Not Warranted)~~ OC DPS (Species of Concern)
Morton Creek (tributary to New Lake/New River)	Coho ~~Chinook salmon~~ Steelhead Coastal cutthroat trout Pacific lamprey Western brook lamprey	OC ESU (Threatened) ~~OC ESU (Not Warranted)~~ OC DPS (Species of Concern)
Floras Creek (tributary to New River)	Coho Chinook salmon Steelhead Coastal cutthroat trout Pacific lamprey Western brook lamprey	OC ESU (Threatened) OC ESU (Not Warranted) OC DPS (Species of Concern)
Jim Creek (tributary to New River)	Coho ~~Chinook salmon~~ Steelhead Coastal cutthroat trout Lamprey likely	OC ESU (Threatened) ~~OC ESU (Not Warranted)~~ OC DPS (Species of Concern)
Willow Creek (tributary to New River)	Coho Chinook salmon Steelhead Coastal cutthroat trout Pacific lamprey	OC ESU (Threatened) OC ESU (Not Warranted) OC DPS (Species of Concern)

Stream Name (Includes Tributaries in Project Area)	Species Present*	ESU/DPS (Federal ESA Status) OC – Oregon Coast SONCC – Southern Oregon/Northern California Coasts KMP – Klamath Mountains Province
Boulder Creek (tributary to Floras Lake/New River)	Coho ~~Chinook salmon~~ Steelhead Coastal cutthroat trout Pacific Lamprey Western brook lamprey	OC ESU (Threatened) ~~OC ESU (Not Warranted)~~ OC DPS (Species of Concern)
Crystal Creek (tributary to Sixes River)	Coho Chinook salmon Steelhead Coastal cutthroat trout Pacific lamprey	OC ESU (Threatened) OC ESU (Not Warranted) OC DPS (Species of Concern)
Sixes River	Coho Chinook salmon Steelhead Coastal cutthroat trout Pacific lamprey Western brook lamprey	OC ESU (Threatened) OC ESU (Not Warranted) OC DPS (Species of Concern)
Indian Creek (tributary to Elk River)	Coho Chinook salmon Steelhead Coastal cutthroat trout	SONCC ESU (Threatened) OC ESU (Not Warranted) KMP DPS (Not Warranted)
Elk River	Coho Chinook salmon Steelhead Coastal cutthroat trout Lamprey	SONCC ESU (Threatened) OC ESU (Not Warranted) KMP DPS (Not Warranted)

Stream Name (Includes Tributaries in Project Area)	Species Present*	ESU/DPS (Federal ESA Status) OC – Oregon Coast SONCC – Southern Oregon/Northern California Coasts KMP – Klamath Mountains Province
Bagley Creek (tributary to Elk River)	Coho ~~Chinook salmon~~ Steelhead Coastal cutthroat trout	SONCC ESU (Threatened) ~~OC ESU (Not Warranted)~~ KMP DPS (Not Warranted)
Hubbard Creek	Coho ~~Chinook salmon~~ Steelhead Coastal cutthroat trout Lamprey	SONCC ESU (Threatened) ~~SONCC ESU (Not Warranted)~~ KMP DPS (Not Warranted)
Bear Creek (tributary to Brush Creek)	Coho ~~Chinook salmon~~ Steelhead Coastal cutthroat trout Lamprey	SONCC ESU (Threatened) ~~SONCC ESU (Not Warranted)~~ KMP DPS (Not Warranted)
Beartrap Creek (tributary to Brush Creek)	Coho ~~Chinook salmon~~ Steelhead Coastal cutthroat trout Lamprey	SONCC ESU (Threatened) ~~SONCC ESU (Not Warranted)~~ KMP DPS (Not Warranted)
Brush Creek (within Hubbard Creek sub-basin)	Coho salmon Chinook salmon Steelhead Coastal cutthroat trout Lamprey	SONCC ESU (Threatened) SONCC ESU (Not Warranted) KMP DPS (Not Warranted)
Reinhart Creek (within Mussel Creek frontal sub-basin)	No fish present~~Coho~~ ~~Chinook salmon~~ ~~Steelhead~~	~~SONCC ESU (Threatened)~~ ~~SONCC ESU (Not Warranted)~~ ~~KMP DPS (Not Warranted)~~

Stream Name (Includes Tributaries in Project Area)	Species Present*	ESU/DPS (Federal ESA Status) OC – Oregon Coast SONCC – Southern Oregon/Northern California Coasts KMP – Klamath Mountains Province
Myrtle Creek	Coho ~~Chinook salmon~~ Steelhead Coastal cutthroat trout Lamprey	SONCC ESU (Threatened) ~~SONCC ESU (Not Warranted)~~ KMP DPS (Not Warranted)
Mussel Creek	Coho ~~Chinook salmon~~ Steelhead Coastal cutthroat trout Lamprey	SONCC ESU (Threatened) ~~SONCC ESU (Not Warranted)~~ KMP DPS (Not Warranted)
Obrien Creek (within the Mussel Creek frontal sub-basin)	No fish present~~Coho~~ ~~Chinook salmon~~ ~~Steelhead~~	~~SONCC ESU (Threatened)~~ ~~SONCC ESU (Not Warranted)~~ ~~KMP DPS (Not Warranted)~~
Euchre Creek	Coho Chinook salmon Steelhead Coastal cutthroat trout Lamprey	SONCC ESU (Threatened) SONCC ESU (Not Warranted) KMP DPS (Not Warranted)
Boulder Creek (tributary to Euchre Creek)	Coho Chinook salmon Steelhead Coastal cutthroat trout Lamprey	SONCC ESU (Threatened) SONCC ESU (Not Warranted) KMP DPS (Not Warranted)
Cedar Creek (tributary to Euchre Creek)	Coho Chinook salmon Steelhead Coastal cutthroat trout Lamprey	SONCC ESU (Threatened) SONCC ESU (Not Warranted) KMP DPS (Not Warranted)

Stream Name (Includes Tributaries in Project Area)	Species Present*	ESU/DPS (Federal ESA Status) OC – Oregon Coast SONCC – Southern Oregon/Northern California Coasts KMP – Klamath Mountains Province
Edson Creek and tributaries (tributary to Rogue River)	Coho ~~Chinook salmon~~ Steelhead Coastal cutthroat trout Lamprey	SONCC ESU (Threatened) ~~SONCC ESU (Not Warranted)~~ KMP DPS (Not Warranted)

* Based on ODFW data (C. Clair and T. Confer pers. comm.), NMFS data (S. Collins pers. comm.) and StreamNet 2010.

References

Claire, Chris. Fish Biologist. Oregon Department of Fish and Wildlife, Charleston, OR. September 14, 2010—telephone call; February 15, 2011—comment letter.

Collins, Sondra. Fisheries Biologist. National Marine Fisheries Service, Habitat Conservation Division, Roseburg, OR. September 14, 2010—telephone call.

Confer, Todd. Fish Biologist. Oregon Department of Fish and Wildlife, Gold Beach District. September 16, 2010—telephone call; March 3, 2011—e-mail.

StreamNet. 2010. StreamNet Fish Distribution Maps. Available: <http://www.streamnet.org/mapping_apps.cfm>. Accessed: October 28, 2010 and March 1, 2011.

APPENDIX H

Study Area Special-Status Wildlife Species

This page left intentionally blank.

Study Area Special-Status Wildlife Species

Common Name	Scientific Name	Federal and Oregon Status	Known occurrences Suitable habitat availability Species specific information	Likely in Study Area?
Acorn woodpecker	*Melanerpes formicivorus*	Federal SOC	No documented occurrences within 2 miles of study area; oak savanna and woodlands provide potential habitat in study area; may be year-round residents.	Yes
Aleutian cackling goose	*Branta hutchinsii leucopareia*	Federal delisted	Flocks observed in floodplain area in study area, pasture; floodplain, and wetland areas provide potential habitat during spring and fall migrations.	Yes
American peregrine falcon	*Falco peregrinus anatum*	Federal delisted; State vulnerable	Two breeding sites documented 2 miles west of study area, on ocean cliffs; may forage in open areas in study area.	Yes
Bald eagle	*Haliaeetus leucophalus*	Federal delisted, State threatened	One nest documented within study area and two other nests recorded outside study area; it is very likely that bald eagles use the study area year round (Love pers. comm.).	Yes
Brown pelican	*Pelecanus occidentalis*	Federal delisted, State endangered	Known to occur 2 miles west of study area, along the coast; pelican habitat does not occur in study area.	No
Coastal tailed frog	*Ascaphus truei*	Federal SOC, State vulnerable	Last observed in study area in Humbug Mountain State Park in 1991; cold, high gradient streams in forested areas in study area provide potential habitat.	Yes
Del Norte salamander	*Plethodon elongatus*	Federal SOC, State vulnerable	Last observed in study area immediately to the north of Humbug Mountain State Park, in 1973; moist talus in coastal forests provide potential habitat; no habitat observed in study area.	No

Common Name	Scientific Name	Federal and Oregon Status	Known occurrences Suitable habitat availability Species specific information	Likely in Study Area?
Fisher	*Martes pennanti*	Federal candidate, State candidate	No documented occurrences in study area; not likely to use the study area (Love pers. comm.).	No
Foothill yellow-legged frog	*Rana boylii*	Federal SOC, State vulnerable	Last observed in study area immediately north of Humbug Mountain State Park, in 1962; small to large streams in study area provide potential habitat.	No
Gold Beach western pocket gopher	*Thomomys mazama helleri*	Federal SOC	Documented at six locations in Curry County, none of which are within the study area; nearest known population is greater than 2 miles south of the study area, near Gold Beach.	No
Harlequin duck	*Histrionicus histrionicus*	Federal SOC	Breeding is unlikely to occur in study area, but foraging may occur in winter; although they primarily use saltwater habitats, they are likely to occur in study area (Love pers. comm.).	Yes
Lewis' woodpecker	*Melanerpes lewisi*	Federal SOC, State candidate	No documented occurrences in study area; breeding habitat includes riparian woodlands; would most likely be found nesting in cavities in cottonwoods.	Yes
Marbled murrelet	*Brachyramphus marmoratus*	Federal threatened	Three known occurrences within 2 miles of study area; designated critical habitat within 0.4 mile of the right-of-way.	Yes
Northern goshawk	*Accipiter gentilis*	Federal SOC, State candidate	No documented occurrences in study area; mature conifer or mixed conifer stands provide potential nesting habitat in study area and foraging habitat occurs in study area; migration through study area may occur in spring and fall.	Yes

Common Name	Scientific Name	Federal and Oregon Status	Known occurrences Suitable habitat availability Species specific information	Likely in Study Area?
Northern pond turtle	*Actinemys marmorata*	Federal SOC, State candidate	No documented occurrences in study area but two documented populations, one near Bandon and one near the Rogue River, have been recorded near but outside of the study area, last recorded in 1995; ponds and low to moderate energy streams provide potential habitat in study area.	Yes
Northern red-legged frog	*Rana aurora*	Federal SOC, State vulnerable	No documented occurrences in study area; last observed greater than 3 miles from study area in 1987; lakes, ponds, and low energy streams provide potential habitat in study area.	No
Northern spotted owl	*Strix occidentalis caurina*	Federal threatened	No documented occurrences in study area; designated critical habitat occurs approximately 5 miles from right-of-way.	Yes
Olive-sided flycatcher	*Contopus cooperi*	Federal SOC, State vulnerable	No documented occurrences in study area; open woodland and riparian areas provide potential habitat in study area.	Yes
Oregon vesper sparrow	*Pooecetes gramineus affinis*	Federal SOC, State candidate	No documented occurrences in study area; unlikely to occur in study area (Love pers. comm.).	No
Pistol River pocket gopher	*Thomomys umbrinus detumidus*	Federal SOC	No documented occurrences in study area; found only in Curry County.	No
Purple martin	*Progne truei*	Federal SOC, State candidate	Last observation in study area was a single pair in Humbug Mountain State Park in 1998; potential nesting and foraging habitat in study area; could be present year-round.	Yes

Common Name	Scientific Name	Federal and Oregon Status	Known occurrences Suitable habitat availability Species specific information	Likely in Study Area?
Red tree vole	*Arborimus longicaudus*	Federal SOC	No documented occurrences in study area; mature conifer forests provide potential habitat in study area; uncommon, lives only in conifers.	No
Ringtail	*Bassariscus astutus*	State vulnerable	Documented occurrences in study area; potential habitat occurs in study area; likely to occur in study area.	Yes
Silver-haired bat	*Lasionycteris noctivagans*	Federal SOC	No documented occurrences in study area; forests provide potential habitat in study area.	No
Southern torrent salamander	*Rhyacotriton variegatus*	Federal SOC, State vulnerable	No documented occurrences in study area; well-shaded, cold, small streams provide potential habitat occurs in study area.	Yes
Townsend's western big-eared bat	*Corynorhinus townsendii*	Federal SOC, State candidate	Last documented within 0.25 mile west of study area in 1990; other observations have been greater than 1 mile, but less than 3 miles, from study area and involved hibernating and roosting bats under bridges, in caves, and in barns; likely to occur in study area. (Love pers. comm.).	Yes
Western snowy plover	*Charadrius alexandrinus nivosus*	Federal threatened	Has been documented within 2 miles of study area at two locations, Euchre Creek and Coquille River, in 1993; last survey was in 1995; sandy coastal beaches provide potential nesting and foraging habitat;. potential habitat does not occur in study area.	No
White-footed vole	*Arborimus albipes*	Federal SOC	Last documented in Coos and Curry counties in 1972; although suitable habitat occurs in the study area species not considered likely to occur.	No

Common Name	Scientific Name	Federal and Oregon Status	Known occurrences Suitable habitat availability Species specific information	Likely in Study Area?
Yellow-breasted chat	*Icteria virens*	Federal SOC, State candidate	No documented occurrences in study area; likely to breed in dense riparian shrubbery in study area (Love pers. comm.).	Yes
Yuma myotis	*Myotis yumanensis*	Federal SOC	Documented within 0.25 mile of study area; population occurs over 1 mile south of study area in the basement of a motel; cliffs and structures provide roosting habitat in study area; potential habitat for migratory populations occurs within the study area.	Yes

SOC = species of concern

Love, Stuart. District Wildlife Biologist, Oregon Department of Fish and Wildlife, Charleston, OR. August 27, 2010—email.

This page left intentionally blank.

APPENDIX I

Proposed Bandon-Rogue Transmission Line Rebuild Project
Greenhouse Gas Emissions Analysis Report

This page left intentionally blank.

Proposed Bandon-Rogue Transmission Line Rebuild Project
Greenhouse Gas Emissions Analysis Report
BPA—Dec 23, 2010

INTRODUCTION

Greenhouse gases (GHG) are chemical compounds found in the earth's atmosphere that absorb and trap infrared radiation, or heat, reradiated from the surface of the earth. The principal GHGs emitted into the atmosphere through human activities are carbon dioxide (CO_2), methane (CH_4), nitrous oxide (N_20), and fluorinated gases (U.S. Environmental Protection Agency 2010). The resulting build-up of heat in the atmosphere increases temperatures, warming the planet and creating a greenhouse-like effect (U.S. Energy Information Administration ~~2009b~~2009a). Human activities are causing an increase in atmospheric concentrations of GHGs. Increasing levels of GHGs could increase the earth's temperature up to 7.2 degrees Fahrenheit (°F) by the end of the twenty-first century (U.S. Environmental Protection Agency 2010).

Carbon dioxide is the major GHG emitted (U.S. Environmental Protection Agency2010; Houghton 2010). CO_2 enters the atmosphere as a result of land use changes, through the burning of fossil fuels, including coal, natural, gas and oil, and wood products, and from the manufacturing of cement. CO_2 emissions resulting from the combustion of coal, oil, and gas constitute 81% of all U.S. GHG emissions (U.S. Energy Information Administration ~~2009a~~2009b). Before the industrial revolution, CO_2 concentrations were roughly stable at 280 parts per million (ppm). By 2005, CO_2 levels had increased to 379 ppm, a 36% increase, due to human activities (Intergovernmental Panel on Climate Change 2007).

Methane is emitted during the production and transport of fossil fuels, through intensive animal farming, and by the degradation of organic waste. Methane concentrations have increased 148% above pre-industrial levels (U.S. Environmental Protection Agency 2010).

Nitrous oxide is emitted during agricultural and industrial activities, and during the combustion of fossil fuels and solid waste. Nitrous oxide atmospheric levels have increased 18% since the beginning of industrial activities.

Fluorinated gases, including hydrofluorocarbons (HFCs), perfluorocarbons (PFCs), and sulfur hexafluoride (SF_6), are synthetic compounds emitted through industrial processes. They are used to replace ozone-depleting compounds such as chlorofluorocarbons in insulating foams, refrigeration, and air conditioning. Although they are emitted in small quantities, these gases have the ability to trap more heat than CO_2 and are considered high global-warming potential gases. Atmospheric concentrations of fluorinated gases have been increasing over the last two decades and are expected to continue (U.S. Environmental Protection Agency 2010).

Global atmospheric GHG concentrations are a product of emissions (release) and removal (storage) over time. Soils store carbon in the form of decomposing plant materials, serving as the largest carbon reservoir on land. When soils are disturbed, CO_2, N_20, and CH_4 emissions increase (Kessavalou et al. 1998).

Through the process of photosynthesis, plants capture atmospheric carbon and store it in the form of sugars. As trees grow, carbon is removed from the atmosphere. As trees decay or are burned, the stored carbon is released into the atmosphere (Ecological Society of America 2008). Because forests have an important role in carbon capture, storage and release, trees can be

thought of as a temporary carbon reservoir. In a natural environment, a tree seed would germinate and grow, storing carbon. Eventually the tree would die and decay, releasing gaseous carbon. Under natural conditions, most dead trees are replaced with a new tree that would grow in its place, recreating a cyclical pattern of carbon storage and release. Peak solid carbon storage occurs when a tree is fully mature, and minimum solid carbon storage occurs immediately after the tree decomposes or burns. Minimum solid carbon storage also occurs when a forested area is permanently converted to a nonforested area, such as grasslands or a developed area such as building footprint or road surface.

REBUILD PROJECT ACTIVITIES THAT WOULD CONTRIBUTE TO GHG EMISSIONS

BPA proposes to rebuild the Bandon-Rogue Transmission Line (Rebuild Project). Two alternatives are proposed for the Rebuild Project. The Proposed Action would involve rebuilding the existing transmission line. Under the No Action Alternative, the transmission line would not be rebuilt and ongoing operation and maintenance activities would continue. Implementation of the rebuild alternative would contribute to an increase in GHG concentrations through the following activities, each discussed in more detail below:

- during construction, through the removal and/or disturbance of vegetation and soils;
- during construction, through the permanent removal of vegetation, including trees, for the construction of new access roads and new transmission line structures;
- during construction, through the use of gasoline- and diesel-powered vehicles, including cars, trucks, construction equipment, and helicopters;
- during ongoing operation and maintenance, through the use of gasoline- and diesel-powered vehicles for routine patrols, maintenance project work (vegetation management, and site specific repairs of roads and transmission line structures and associated hardware components), emergency maintenance, and resource review; and
- during ongoing operation and maintenance, through the use of helicopters for aerial inspections of the transmission line corridor.

METHODS USED TO CALCULATE GHG EMISSIONS

Construction

Construction for the Proposed Action would take about 8 months in total (May–December), with peak construction activity occurring during a 5-month period (June–October). During the 5-month peak construction period, access road work and structure-related construction would take place. Non-peak construction activities would include installing and removing erosion control measures such as silt fencing, establishing staging areas and moving equipment and materials into and out of the project area, conducting site preparation and site restoration work along access roads and at structure sites, monitoring culvert function, and other similar activities.

The transportation components of GHG emissions were estimated for the Proposed Action based on the approximate number of vehicles that would be used during project construction and the approximate distance those vehicles would travel during the construction period. GHG

emissions were calculated for both the 5-month peak construction period and the 3-month non-peak period, using a total estimate of vehicle round trips per day during those time periods.

Overestimating the number of round trips produces artificially high GHG emission estimates, which ensures that potential GHG emissions are fully described. The number of round trips was deliberated overestimated in the following ways.

- The assumption was made that all workers would travel in separate vehicles to and within the project area each day. Because some workers would likely carpool, this could be an overestimate.
- The highest estimate of the number of workers that would be needed to construct the Rebuild Project was used.
- The round-trip distance to work on the transmission line corridor was considered to be from Coos Bay to the Rogue Substation and back (about 150 miles). Although some workers might stay in the closer towns of Port Orford or Bandon, these towns are summer tourist destinations and accommodations may not be available.
- The round-trip estimate assumes the workers would travel the full length of the project area each day, which is true for some workers such as inspectors, but would not be true for other workers who work at specific sites each day, and could spend their days near Bandon, rather than in the southern portion of the project area.
- Fuel consumption rates are based off the average fuel economy for standard pick-up trucks of 18 miles per gallon (mpg). Again, this is likely an overestimation as more efficient vehicles may occasionally be used.
- Average helicopter fuel consumption rates were estimated by BPA pilots at 1 mpg.

Up to an estimated 60 construction workers would be at work on the Rebuild Project during the peak construction period (5 months) and an estimated 30 workers could be present during the non-peak construction period (3 months). The round-trip distance used for their travel is from Coos Bay to the Rouge Substation, a distance of 150 miles per trip.

BPA staff would travel to the transmission line for various purposes, including to inspect work, attend various meetings, monitor environmental compliance, meet with landowners, and for other purposes. An estimated two trips per week could be made from the Portland or Vancouver BPA Offices during the 8-month construction period, for a total of 70 round trips. The round-trip distance used for their travel is estimated as 700 miles per trip.

Helicopters may be used during the replacement of the conductor. The round-trip methodology was applied to the use of helicopters in the same way that it was applied to the use of other construction vehicles. After the equipment (puller and tensioner) is set up, a “sock” line (usually a rope) would be strung through all the structures using a helicopter. It was assumed that the helicopter would take approximately 1 month to conduct this work. Two round trips would likely be made from the North Bend Airport each day, for a total of 40 round trips. The round-trip distance used was from the North Bend Airport to the Rouge Substation, a total of 150 miles per trip.

Fuel consumption and GHG emissions would also occur from operation of on-site heavy construction equipment. Heavy construction equipment may include augers, dozers, excavators, graders, heavy-duty trucks, and front-end loaders. Similar to the transportation activities listed above, increased use of heavy construction equipment would occur during peak construction.

Although it is difficult to develop an accurate estimation of total fuel consumption associated with heavy construction equipment (equipment) operation, the following assumptions were utilized.

- A maximum of 40 equipment machines would be in operation during peak construction and 20 equipment machines would be in operation during off-peak construction.
- The average size of the equipment would not exceed 250 horsepower. In addition, all equipment would operate at maximum power for 8 hours per day and 5 days per week throughout the construction phase. This is a significant overestimation, because equipment commonly operates in idle or at reduced power.
- Equipment would operate at approximately 35% efficiency; this efficiency represents the percentage of productive energy extracted from the diesel fuel relative to the maximum potential energy within the fuel (i.e. 138,000 BTU/gallons of diesel).

The estimation of GHG emissions associated with equipment operation was overestimated to account for all potential construction activities and associated material deliveries to and from the construction site.

Operations and Maintenance

During operation and maintenance of the transmission line, the transmission line corridor would be visited each year for the following purposes, resulting in GHG emissions:

- routine patrols such as access road, structure, and vegetation inspections (60 round trips per year) from the BPA North Bend Office (150 miles round trip);
- maintenance project work to repair roads and structures and associated hardware (160 round trips per year) from the BPA North Bend Office (150 miles round trip);
- emergency maintenance to address line outages, land slides, and other unpredicted events (40 round trips per year) from BPA North Bend Office (150 miles round trip);
- natural resource review (8 round trips per year) from the BPA Goshen Office (380 miles round trip); and
- aerial inspections by helicopter (2 routine visits per year, up to 2 maintenance-specific trips per year, such as facility winter readiness checks, from Portland Airport to Rogue Substation (600 miles round trip).

The transmission line corridor includes two transmission lines. Rather than attempting to determine how much of the annual maintenance relates to each transmission line, the total number of estimated trips to the corridor was used. This results in an overestimation of the GHG emissions resulting from operation and maintenance of the Bandon-Rogue transmission line, because the estimate also includes the GHG emissions resulting from operation and maintenance of the Fairview-Rogue transmission line.

Vegetation management activities, including danger tree removal, would be conducted in some years, but it is assumed that removed vegetation would regrow. Because vegetation management does not include permanent vegetation removal, this activity was not included in GHG calculations.

The life of the transmission line is estimated to be approximately 50 years. Calculations of GHG emissions include operation and maintenance work for the 50-year life span of the rebuilt transmission line.

Vegetation Removal

Estimation of GHG emissions from soil disturbance was not included in this analysis. Research has shown that emissions as a result of soil disturbance are short lived and return to background levels within several hours (Kessavalou et al. 1998; Intergovernmental Panel on Climate Change 2006). Because the methodology used to estimate vehicle emissions resulted in an overestimation of transportation-related emissions, the low levels of GHG emissions related to soil disruption and annual vegetation decay are considered to be accounted for in the overall construction emission rates discussed above. Carbon that would be stored in removed vegetation would be offset in time by the growth and accumulation of carbon in soils and new vegetation.

The permanent removal of trees and other vegetation would occur in two ways. The building of new access roads would result in the creation of a road surface and shoulders that would be kept clear of trees. The addition of 19 new transmission line structures would result in additional portions of the transmission line right-of-way being maintained without trees. Creating more right-of-way areas where trees are not allowed to grow permanently maintains the BPA right-of-way at the minimum level of solid carbon storage, as opposed to a mature forest. The Rebuild Project does not include acquisition of additional transmission line right-of-way.

Tree growth and future carbon sequestration rates are highly variable and depend on several factors including the species of tree, age of tree, climate, forest density, and soil conditions. Within the Pacific Northwest, a report published by the U.S. Forest Service in 2006 estimates the maximum carbon density associated with a fully mature forest ranges from 60 to 364 metric-tons of carbon per acre (Birdsey et al. 2006). Although tree removal does not immediately emit any GHG, this analysis is intended to account for the permanent loss of a carbon storage reservoir resulting from land use changes.

Approximately 4,049 feet of new access roads would be constructed within a 50-foot-wide easement. Because BPA access road standards only require a minimum 14-foot-wide travel surface with a 20-foot-wide travel corridor, a portion of the 50-foot-wide road easements would remain undisturbed. GHG emissions are overestimated by assuming that the entire road easement would be converted from a fully mature, forested area to an area that is permanently kept clear of trees. This analysis assumes that approximately 4.6 acres of land would be permanently cleared of vegetation. The operation of tree removal equipment to clear new access road areas of trees was included within the construction section analysis, described above.

Nineteen additional transmission line structures would be added to the transmission line. Around each structure, portions of the existing right-of-way would be converted to herbaceous or shrub-dominated plant communities where seedling trees would be routinely cut when they exceed a certain height. This analysis assumes that trees currently exist in each of these 19 locations. An area up to 100 feet by 100 feet (0.23 acre) would be maintained for each structure. Because 19 additional structures would be added to the transmission line, this area totals 4.4 acres.

In total, up to 9 acres of land would be converted to an area where trees would not be allowed to regrow. This is an overestimation because some of these areas either currently lack mature trees or are already within existing BPA right-of-way.

RESULTS

GHG emissions were calculated using the methodology described above. Calculations were done for three types of activities: construction from rebuilding the transmission line, ongoing annual operations and maintenance for the estimated 50-year life of the transmission line, and permanent vegetation removal for new access roads and for 19 new structures. Each type of activity is discussed separately below. The "Methods" section above explains assumptions used in making calculations.

Construction-Related GHG Emissions

Table 1 displays the results of calculations for the construction activities that would contribute to GHG emissions. Construction of the Rebuild Project would result in an estimated 9,900 metric tons of CO_2 emissions. All GHG emissions associated with construction activities would be attributed to the year in which construction would take place. Given this low amount of contribution, the impact of Rebuild Project construction on GHG concentrations would be considered low.

Table 1. Estimated GHG Emissions from Project Construction

Estimated GHG emissions of construction activities	CO_2 Emissions (metric tons)	CH_4 Emissions (CO_2e[1] emissions in metric tons)	N_2O Emissions (CO_2e[1] emissions in metric tons)	Total CO_2e Emissions (metric tons)
Peak construction transportation	480	334	1,195	2,810
Off-peak construction transportation	140	100	590	840
BPA employee transportation	24	17	99	140
Helicopter operation	54	1.0	0.22	55
Peak construction: equipment operation	4,600	4.9	31	4,700
Off-peak construction: equipment operation	1,400	1.5	9.3	1,400
TOTAL	6,700	460	2,700	**9,900**

[1] CH_4 and N_2O emissions have been converted into units of equivalent CO_2 (CO_2e) using the Intergovernmental Panel on Climate Change global warming potential (GWP) factors of 21 GWP for CH_4 and 310 GWP for N_2O.

Operations and Maintenance Related GHG Emissions

Table 2 displays the results of calculations for the operation and maintenance activities that would contribute to GHG emissions. Operation and maintenance of the Rebuild Project would result in an estimated 120 metric tons of equivalent CO_2 (CO_2e) emissions per year, which translate to the annual CO_2 emissions of less than 21 passenger vehicle. Given this low amount of contribution, the impact of operation and maintenance activities on GHG concentrations would be considered low.

Table 2. Estimated GHG Emissions from Project Operation and Maintenance

Type of Operation and Maintenance Activity	CO_2 Emissions (metric tons per year)	CH4 Emissions (CO2e1 emissions in metric tons per year)	N2O Emissions (CO2e emissions in metric tons per year)	Total CO2e Emissions (metric tons per year)
Routine patrols	4.4	1.2	18	24
Maintenance work	12	3.3	49	64
Emergency maintenance	3.0	0.83	12	16
Natural resource review	1.5	0.42	6.2	8.1
Helicopter surveys	10	0.18	0.041	10
TOTAL	31	6.0	86	120

[1] CH_4 and N_2O emissions have been converted into units of CO_{2e} equivalent using the Intergovernmental Panel on Climate Change global warming potential (GWP) factors of 21 GWP for CH_4 and 310 GWP for N_2O.

Vegetation Removal Related GHG Emissions

Table 3 displays the results of calculations for the construction activities that would contribute to GHG emissions through permanent tree removal for construction of new access roads and 19 additional structures. Assuming each affected acre contains the maximum level of carbon storage within the proposed carbon density range above, the net carbon footprint associated with the removal of trees would be estimated as 12,100 metric tons of CO_2e. Given this low amount of contribution, the impact of permanent vegetation removal on GHG concentrations would be considered low.

Table 3. The Net Carbon Footprint Associated with the Removal of the Maximum Number of Trees (units in metric tons of CO_2e)

Type of Activity	Maximum Loss of Carbon Storage	TOTAL
Construction of 19 additional transmission line structures	5,900	5,900
Construction of new access roads	6,200	6,200
Total	12,100	**12,100**

SUMMARY

GHG reporting protocols and accounting principles dictate direct emissions (e.g., tailpipe) and indirect emissions (e.g., electricity use) be reported cumulatively within associated documents. Emissions resulting from biomass combustion or land-use changes, however, are considered optional for reporting and, if reported, should not be added to direct or indirect emission calculations (The Climate Registry 2008). Total direct GHG emissions associated with the Rebuild Project are estimated to be approximately 9,900 metric tons of CO_2e from transportation-related emissions and an additional 120 metric tons of CO_2e per year from operation and maintenance activities. Total GHG emissions and removals resulting from land-use changes could be as high as 12,100 metric tons of CO_2e.

To provide context for direct emissions resulting from construction and operation and maintenance, EPA's mandatory reporting threshold for annual CO_2 emissions is 25,000 metric tons of $C0_2$e. This threshold is roughly the amount of CO_2 generated by 4,400 passenger vehicles per year. This threshold requires federal reporting of GHG emissions, but does not

require any other action (Code of Federal Regulations, Title 40, Parts 86, 87, 89 et al.). The direct emissions associated with the Rebuild Project, however, would be roughly equivalent to 1,700 passenger vehicles for the initial year and roughly 21 passenger vehicles for all subsequent years. All levels of GHG emissions are significant in that they contribute to global GHG concentrations and climate change. Given this low amount of contribution, however, the Rebuild Project's impact on GHG concentrations would be considered low.

RECOMMENDED MITIGATION MEASURES

The following mitigation measures would reduce or eliminate Rebuild Project GHG emissions.

- Implement vehicle idling and equipment emissions measures.
- Encourage carpooling and the use of shuttle vans among construction workers to minimize construction-related traffic and associated emissions.
- Locate staging areas as close to construction sites as practicable to minimize driving distances between staging areas and construction sites.
- Locate staging areas in previously disturbed or graveled areas to minimize soil and vegetation disturbance where practicable.
- Encourage the use of the proper size of equipment for the job.
- Use alternative fuels for generators at construction sites such as propane or solar, or use electrical power where practicable.
- Reduce electricity use in the construction office by using compact fluorescent bulbs and turning off computers and other electronic equipment every night.
- Recycle or salvage nonhazardous construction and demolition debris where practicable.
- Dispose of wood poles in the local area where practicable.
- Use local sources for rock for road construction.

REFERENCES

Birdsey, Richard A., Kurt Pregitze, and Alan Lucier. 2006. Forest carbon management in the United States: 1600-2100. *Journal of Environmental Quality* 35: 1461–1469.

U.S. Energy Information Administration. 2009a. *Energy and the Environment. Greenhouse Gases Basics*. Available: <http://tonto.eia.doe.gov/energyexplained/index.cfm?page=environment_about_ghg>. Accessed: January 29, 2010.

U.S. Energy Information Administration. ~~2009a~~2009b. *Emissions of Greenhouse Gases Report*. DOE/EIA-0573(2008). Available: <http://www.eia.doe.gov/oiaf/1605/ggrpt/>. Accessed: July 19, 2010.

U.S. Environmental Protection Agency. 2010~~b~~. *Climate Change—Science: Atmosphere Changes*. Available: <http://www.epa.gov/climatechange/science/recentac.html>.

Ecological Society of America [Content Partner], Jan-Peter Mund (Topic Editor). 2008. *Soil carbon sequestration fact sheet*. In: C. J. Cleveland (ed.) (Washington, D.C.:

Environmental Information Coalition, National Council for Science and the Environment). *Encyclopedia of Earth*. Available: <http://www.eoearth.org/article/Soil_carbon_sequestration_fact_sheet>. Accessed: July 20, 2010.

Houghton, R. 2010. *Understanding the Carbon Cycle*. The Woods Hole Research Center, Falmouth, MA. Available: < http://www.whrc.org/global/carbon/index.html>. Accessed: January 29, 2010.

Intergovernmental Panel on Climate Change. 2007. *Climate Change 2007: Working Group I: The Physical Science Basis*. Chapter 2: Changes in Atmospheric Constituents and Radioactive Forcing: Atmospheric Carbon Dioxide. Available: <http://www.ipcc.ch/publications_and_data/ar4/wg1/en/ch2.html>. Accessed: January 29, 2010.

Intergovernmental Panel on Climate Change. 2006. *2006 IPCC Guidelines for Natural Greenhouse Gas Inventories*. Prepared by the National Greenhouse Gas Inventories Programme, Eggleston, H.S., L. Buendia, K. Miwa, T. Ngara, and K. Tanabe (eds). Japan: IGES.

Kessavalou, X. 1998. Greenhouse Gas Fluxes Following Tillage and Wetting in a Wheat-fallow Cropping System. *Journal of Environmental Quality* 27: 1105–1116.

The Climate Registry. 2008. *General Reporting Protocol for the Voluntary Reporting Program*. May.

This page left intentionally blank.

APPENDIX J

Mitigation Action Plan

This page left intentionally blank.

MITIGATION ACTION PLAN
FOR THE
BONNEVILLE POWER ADMINISTRATION
BANDON-ROGUE TRANSMISSION LINE REBUILD PROJECT

This Mitigation Action Plan (MAP) is referenced in the Finding of No Significant Impact (FONSI) for the Bonneville Power Administration (BPA) Bandon-Rogue Transmission Line Rebuild Project (Rebuild Project) (U.S. Department of Energy Environmental Assessment DOE/EA-1739, April 2011). The Rebuild Project involves rebuilding 46 miles of an existing 115-kilovolt transmission line, working on transmission line access roads, and removing danger trees. The transmission line extends south from the existing BPA Bandon Substation, located in the city of Bandon, Oregon, to the existing BPA Rogue Substation, located near the town of Nesika Beach, Oregon.

This MAP includes all of the measures presented in the Final Environmental Assessment (Final EA) to mitigate adverse environmental impacts. BPA developed this MAP to further reduce the potential for adverse impacts from the Rebuild Project regardless of their potential significance or lack thereof. Mitigation includes actions that were taken during the design phase to avoid or minimize adverse impacts. It also includes mitigation measures that will be implemented during preconstruction, construction, and post-construction implementation of the Rebuild Project. Some mitigation measures result from collaborative consultation and coordination with stakeholders and others are best management practices that BPA adopts based on past experience maintaining, building, and operating transmission lines. The MAP lists all measures, components of each measure and who is responsible, and the implementation schedule. This MAP obligates BPA to ensure the mitigation of potential adverse impacts.

Some similar mitigation measures presented in the Final EA were combined in the MAP for ease of implementation. For example, a mitigation measure from Section 3.5, Vegetation, stated that rock from weed-free quarries would be used. In Section 3.13, Greenhouse Gases, a mitigation measure called for obtaining rock from local sources. These measures were combined in the MAP (now referred to as MAP Measure 38) without changing either measure.

The MAP measures will be implemented as indicated in the table below. This MAP may be amended if revisions are needed as a result of new information or if there are any project changes.

Mitigation has and will continue to occur throughout the Rebuild Project. Mitigation has occurred during the planning and design phase and some measures have been completed, including MAP Measures 1 through 7 (See the MAP table below). For MAP measures that have already been completed, “Complete” is noted in parentheses after the measure name. Mitigation will continue during preconstruction planning, during Rebuild Project implementation (construction), and after construction is completed. Post-construction mitigation includes stabilization and revegetation of disturbed areas and implementation of other mitigation as agreed upon in consultation with state and federal agencies.

The purpose of this MAP is to explain how the mitigation measures were or will be implemented. It clearly identifies the components of each mitigation measure and identifies who was or is responsible for the implementation, and at what time during the project the measures were or will be implemented.

A construction contractor will rebuild this transmission line for BPA. To ensure that the construction contractor will implement the mitigation measures that the construction contractor is responsible for, the relevant portions of this MAP will be included in the Mitigation Implementation Table (the directions to the contractor) for the Rebuild Project.

BPA is in the process of obtaining required permits and completing coordination and consultation with state and federal agencies and tribes. Although some consultation is complete, some was ongoing at the

time the MAP was finalized. Chapter 4 of this EA describes the types of consultation and permits that are referenced in this MAP. Although the specific requirements of all permits and consultation are not listed in the MAP, the construction contractor and BPA are required to follow the terms, conditions, and provisions of the various permits and consultations. Therefore, the requirements of permits and outcomes of consultation are assumed to be part of this MAP, as appropriate.

If you have general questions about the Rebuild Project, contact the BPA Project Manager, Erich Orth: toll-free telephone 800-282-3713, direct telephone 360-619-6559, or e-mail etorth@bpa.gov.

If you have questions about the MAP, contact the BPA Environmental Lead for Rebuild Project environmental review, Kimberly St.Hilaire: toll-free telephone 800-282-3713, direct telephone 503-230-5361, or e-mail krsthilaire@bpa.gov.

If you have questions about the MAP during project implementation, contact the BPA Environmental Lead for Rebuild Project implementation, Oden Jahn: toll-free telephone 800-282-3713, direct telephone 503-230-7501, or e-mail owjahn@bpa.gov.

PERSONS IMPLEMENTING MITIGATION ACTION PLAN

In addition to listing the components of each MAP measure, the MAP table indicates the person(s) responsible for implementing each component. The role of each of these person(s) is described below.

- **BPA Project Manager (PM):** The PM has the responsibility for the Rebuild Project planning, design, and construction, including environmental compliance, budget, and schedule.
- **Contractor (Contractor):** The Contractor is hired by BPA to implement the Rebuild Project and works with the BPA Contracting Officer's Technical Representation to ensure that all contract specifications are followed.
- **BPA Contracting Officer's Technical Representation (COTR):** The COTR includes the inspector and other BPA personnel who work with the Contractor on a regular basis to ensure the Contractor follows the construction specifications, which include the relevant portions of the MAP.
- **Design Engineer (DE):** The DE was hired by BPA to design the transmission line and works with the project team to site structures and other transmission line project elements and to specify their size and type of design.
- **BPA Road Engineer (RE):** The RE assesses the condition of the existing access road system, identifies work needed on existing access roads, designs any new access roads needed, and works with the project team to use materials and techniques that minimize adverse environmental impacts.
- **BPA Lands Specialist (BPALS):** The BPALS works with landowners to acquire any needed easements for the transmission line and access roads and works with landowners with easements on any issues that arise.
- **Contractor Lands Specialist (CLS):** The CLS works with landowners and the local community to inform them of activities that could affect them and informs BPA of any public and landowner issues that arise during Rebuild Project implementation.
- **BPA Public Affairs Specialist (PAS):** The PAS ensures that stakeholders are identified and that they are informed of project activities and given the opportunity to provide input. The PAS works with other project team members to disseminate information to the public concerning the project plans and schedule.
- **BPA Environmental Specialist from the Environmental Planning and Analysis Group (ES-KEC):** The ES-KEC is responsible for environmental compliance and consultation, including the NEPA process and document, of which this MAP is a part.
- **BPA Environmental Specialist from the Pollution Prevention and Abatement Group (ES-KEP):** The ES-KEP is responsible for permitting, the preparation of the Mitigation

Implementation Table for the Contractor, contractor orientation, monitoring of compliance with mitigation measures, and resolution of any issues regarding mitigation.

- **BPA Archeologist (ARCH):** The ARCH works with the ES-KEC to determine if any cultural resources will be adversely affected, designs mitigation, and responds if any cultural resources are found during the course of construction.
- **BPA Forester (FOR):** The FOR determines which trees need to be cut to ensure the safe construction and operation of the transmission line and works with the ES-KEC and ES-KEP to determine how to limit the disturbance from tree removal activities to mitigate for adverse environmental effects; the FOR is also responsible for weed inventories and some weed control.
- **BPA Geotechnical Engineer (GE):** The GE determines what areas may be susceptible to landslides and provides input about the suitability of locations for new and relocated structures based on soil and slope characteristics.
- **BPA Eugene District:** The BPA Eugene District office is responsible for ongoing operation and maintenance of the transmission line, including ongoing vegetation management and any repairs or necessary maintenance activities to structures, conductor, and access roads before and after construction of the Rebuild Project.

Mitigation Measures for the Bandon-Rogue Transmission Line Rebuild Project

Mitigation Measure	Components of Mitigation Measure (Person(s) Responsible for Implementation)	Schedule (Time of Implementation)	Applicable Resource(s)
1 Avoid siting new structures and access roads in active landslide zones during the design process. (Complete)	1.1 Identify active landslide areas and avoid siting new structures or access roads in these areas (DE, RE, GE, ES-KEC).	1.1 Completed during design phase	Geology and Soils
2 Avoid siting new structures and access roads within 200 feet of streams and wetlands during the design process, where possible. (Complete)	2.1 During the design phase, locate and map wetland boundaries and streams relative to proposed structures (ES-KEC). 2.2 Visit proposed structure and road locations; avoid or minimize impacts on water features and buffer areas by locating proposed structures as far away as possible (DE, RE, ES-KEC).	2.1 Completed during design phase 2.2 Completed during design phase	Wetlands, Fish
3 Design culverts that would be installed in fish-bearing streams to meet fish passage criteria, in consultation with Oregon Department of Fish and Wildlife (ODFW) and National Marine Fisheries Service (NMFS). (Complete)	3.1 Consult with ODFW and NMFS regarding streams where fish-bearing culverts are needed for fish passage (ES-KEC). 3.2 Incorporate ODFW and NMFS culvert design criteria where appropriate (ES-KEC, RE).	3.1 Completed during design phase 3.2 Completed during design phase	Fish
4 Retire an existing road over Bethel Creek to avoid a bridge replacement and access road work in coho salmon habitat. (Complete)	4.1 Indicate road as retired on project maps and documents (ES-KEC).	4.1 Completed during design phase	Fish

Mitigation Measure	Components of Mitigation Measure (Person(s) Responsible for Implementation)	Schedule (Time of Implementation)	Applicable Resource(s)
5 Conduct off-site riparian plantings along three streams that are temperature-impaired according to DEQ to improve fish habitat.	5.1 Identify suitable areas along temperature-impaired streams where additional vegetative cover is needed and contract for implementation riparian plantings (ES-KEC).	5.1 During and after construction	Fish, Waterways and Water Quality
6 Avoid placement of new structures and new access roads in floodplains. (Complete)	6.1 During the design phase, map floodplain boundaries relative to proposed structures and access roads (ES-KEC). 6.2 Locate proposed structures and roadways outside of floodplains, where possible; (DE, ES-KEC).	6.1 Completed during design phase 6.2 Completed during design phase	Floodplains
7 Minimize the number of access roads used within floodplains by retiring roads from BPA use within floodplains, where possible. (Complete)	7.1 During the design phase, visit roads within floodplains to determine if they are essential or if they could be retired (RE).	7.1 Completed during design phase	Floodplains
8 Relocate an existing access road to ensure it is at least 25 feet away from western lily plants. (Complete)	8.1 During project planning, relocate an existing access road at least 25 feet from western lily plants (DE, RE, PM, ES-KEC).	8.1 Completed during design phase	Vegetation

Mitigation Measure	Components of Mitigation Measure (Person(s) Responsible for Implementation)	Schedule (Time of Implementation)	Applicable Resource(s)
9 Develop and distribute a schedule of construction activities to potentially affected landowners along the transmission line corridor to inform residents when they may be affected by construction activities; advertise construction schedule in local newspapers and post in public places customarily used for public notices, such as libraries, post offices, and local government buildings.	9.1 Develop list and schedule of construction activities with the potential to affect landowners (COTR, Contractor). 9.2 Distribute schedule to landowners; advertise construction schedule in local newspapers (CLS, PAS). 9.3 Update schedule and redistribute (Contractor, CLS, PAS).	9.1 Prior to construction 9.2 Prior to construction (2 weeks notice, if possible) 9.3 As needed during construction	Land Use and Recreation, Visual Quality, Socioeconomics and Public Services
10 Develop and distribute a schedule of construction activities to potentially affected farm and timber operators along the transmission line corridor to allow planting, harvesting, or maintenance activities to be scheduled around construction.	10.1 Develop list and schedule of activities with the potential to affect farm and timber operators (COTR, Contractor). 10.2 Distribute schedule to farm and timber operators (CLS, PAS). 10.3 Update schedule and redistribute (Contractor, CLS, PAS).	10.1 Prior to construction 10.2 Prior to construction (2 weeks notice, if possible) 10.3 As needed during construction	Land Use and Recreation, Socioeconomics and Public Services

Mitigation Measure	Components of Mitigation Measure (Person(s) Responsible for Implementation)	Schedule (Time of Implementation)	Applicable Resource(s)
11 Provide a schedule of construction activities to the owners/managers of potentially affected recreational facilities to allow them to advise visitors and appropriately schedule any events that could be adversely affected by construction activities.	11.1 Develop list and schedule of activities with the potential to affect recreational activities along the transmission line corridor (COTR, Contractor). 11.2 Distribute schedule to owners/managers of recreational facilities (CLS, PAS). 11.3 Update schedule and redistribute (Contractor, CLS, PAS).	11.1 Prior to construction 11.2 Prior to construction (2 weeks notice, when possible) 11.3 As needed during construction	Land Use and Recreation, Visual Quality
12 Coordinate the routing and scheduling of construction traffic with the Oregon Department of Transportation (ODOT) and Coos County and Curry County road staff to minimize interruptions to local traffic.	12.1 Develop a schedule and notice of construction traffic (COTR, Contractor). 12.2 Deliver notice and coordinate with ODOT and Coos County and Curry County road staff for posting (COTR, CLS). 12.3 Update schedule and redistribute, as needed (Contractor, CLS).	12.1 Prior to use of roads by construction equipment 12.2 Within appropriate time frame for timely posting 12.3 As needed during construction	Land Use and Recreation, Socioeconomics and Public Services
13 Conduct a preconstruction public meeting and invite landowners to meet with the Contractors and BPA staff responsible for project implementation in order to receive information and discuss concerns.	13.1 Contact landowners by mail with meeting information (CLS, PAS, ES-KEP, Contractor).	13.1 Prior to construction	Land Use and Recreation

Mitigation Measure	Components of Mitigation Measure (Person(s) Responsible for Implementation)	Schedule (Time of Implementation)	Applicable Resource(s)
14 Require the Contractor to employ a lands liaison, who will be available to provide information, answer questions, and address concerns during project construction.	14.1 Develop and provide contact information for contractor liaisons and BPA staff to local residents (CLS, PAS, COTR, ES-KEP). 14.2 During construction, promptly route all information on landowner concerns to the PM to address (all BPA staff). 14.3 If landowners raise concerns, contact the landowner to discuss concerns (PM, BPALS, and others, as appropriate).	14.1 Prior to construction 14.2 Within 2 business days 14.3 As needed	Visual Quality, Socioeconomics and Public Services, Noise, Public Health and Safety
15 Provide appropriate contact information for contractor liaisons and BPA staff to local residents for any concerns or complaints during construction.	15.1 Develop and provide contact information for Contractor and BPA staff to local residents (CLS, PAS). 15.2 During construction, promptly route all information on any landowner contacts to the PM to address (all BPA staff, Contractor). 15.3 If landowners raise concerns, contact the landowner to discuss concerns (PM, BPALS, other staff as appropriate).	15.1 Prior to construction 15.2 Within 2 business days 15.3 As needed	Land Use and Recreation

Mitigation Measure	Components of Mitigation Measure (Person(s) Responsible for Implementation)	Schedule (Time of Implementation)	Applicable Resource(s)
16 Explain resource-related mitigation measures and permit conditions to the Contractors and inspectors during a preconstruction meeting covering environmental requirements (specifically for western lily, noxious weeds, water quality, waterways, wetlands, and fish and wildlife and generally for other resources).	16.1 Explain to Contractors where sensitive areas are located and how they are depicted on maps and in the Mitigation Implementation Table (ES-KEP, COTR, Contractor).	16.1 Prior to construction	Vegetation, Waterways and Water Quality, Wetlands, Fish, Wildlife, Cultural Resources
	16.2 Explain required actions to prevent weed introduction and spread (ES-KEP, COTR, Contractor).	16.2 Prior to construction	
	16.3 Explain water quality, wetlands, and waterways mitigation measures, including required best management practices (BMPs), permit requirements, restrictions while working near waterways and wetlands, field flagging/staking of water features, and protocol to follow if flagging/staking is inadvertently removed or missing (ES-KEP, COTR, RE, Contractor).	16.3 Prior to construction	
	16.4 Explain to Contractors fish-related mitigation measures, including permit and consultation requirements, such as instream work periods and applicable BMPs (ES-KEP, COTR, RE, Contractor).	16.4 Prior to construction	
	16.5 Explain to Contractors wildlife-related mitigation measures, including permit and consultation requirements, such as locations of restricted areas and timing of noise restrictions (ES-KEP, COTR, RE, Contractor).	16.5 Prior to construction	
	16.6 Explain to Contractor work restrictions and special procedures within cultural sites, how to identify conditions under which work should be stopped, the role of cultural monitors, how to coordinate with them for the times they are needed, and safety procedures for their work (ARCH, COTR, Contractor).	16.6 Prior to construction	

Mitigation Measure	Components of Mitigation Measure (Person(s) Responsible for Implementation)	Schedule (Time of Implementation)	Applicable Resource(s)
17 Locate staging areas in previously disturbed or graveled areas to minimize soil and vegetation disturbance, where practicable.	17.1 Locate staging areas in previously disturbed or graveled areas to minimize soil and vegetation disturbance, where practicable (ES-KEP, COTR, Contractor).	17.1 Prior to construction	Geology and Soils, Greenhouse Gases
18 Conduct peak construction activities during the dry season (between June 1 and November 1), as much as possible, to minimize erosion, sedimentation, and soil compaction.	18.1 Conduct project construction activities during May through December 2011, with most of the major construction activities occurring during the drier portions of the year, from June though early October (COTR, Contractor).	18.1 May–December 2011	Geology and Soils, Waterways and Water Quality, Wetlands, Floodplains
19 Keep construction activities and equipment clear of residential driveways, to the greatest extent possible.	19.1 Avoid placing equipment or conducting construction activities in a manner that would block residential driveways, where possible (Contractor, COTR).	19.1 During construction	Land Use and Recreation, Visual Quality
20 Schedule all construction work during daylight hours to avoid noise and the use of nighttime illumination of work areas.	20.1 Schedule construction during daylight hours (COTR, Contractor).	20.1 During construction	Visual Quality, Noise
21 Use water trucks or other appropriate methods to control dust during construction, as needed.	21.1 Determine if dust is being generated on the project site and control as needed, in accordance with the SWPP Plan; do not withdraw water for dust control use from any water body in the project area, unless permitted (COTR, Contractor).	21.1 During construction	Visual Quality, Air Quality

Mitigation Measure	Components of Mitigation Measure (Person(s) Responsible for Implementation)	Schedule (Time of Implementation)	Applicable Resource(s)
22 Employ traffic control flaggers and post signs along roads warning of construction activity and merging traffic for temporary interruptions of traffic, where needed.	22.1 Develop a Traffic Safety Plan that will address when signs and flaggers are needed; obtain plan approval from BPA (PM, COTR, Contractor). 22.2 Ensure that the Contractors use signs and flaggers when required (COTR, Contractor).	22.1 Prior to and during construction 22.2 During construction	Land Use and Recreation, Public Health and Safety
23 Instruct Contractors to promptly close all gates after entry to avoid frightening or endangering livestock, and to contact landowners immediately if problems with livestock occur.	23.1 Work with landowners to identify gates needing immediate closure after entry because of livestock concerns (CLS, COTR, Contractor). 23.2 Identify incidents involving livestock so that appropriate BPA team member can contact landowners immediately (Contractor, CLS, PM, PAS).	23.1 Prior to construction 23.2 As soon as possible, no later than 24 hours	Land Use and Recreation

Mitigation Measure	Components of Mitigation Measure (Person(s) Responsible for Implementation)	Schedule (Time of Implementation)	Applicable Resource(s)
24 Install vehicle and equipment wash stations to minimize spread of weeds and Port-Orford-cedar root disease, preferably near where pavement ends and gravel or dirt access roads begin, if feasible[1]; use wash stations to clean vehicles and equipment prior to entering and leaving each work area; and prohibit discharge of vehicle wash water into any stream, waterbody, or wetland.	24.1 Install wash stations in appropriate locations to ensure that vehicles leaving and entering each work area are weed free (COTR, Contractor). 24.2 Prohibit discharge of vehicle wash from entering into any stream, water body, or wetland (COTR, Contractor).	24.1 Prior to construction 24.2 During construction	Land Use and Recreation, Vegetation, Wildlife
25 Conduct standard inspections for work occurring within inactive landslide zones during construction.	25.1 Inspect work occurring within inactive landslide zones at regular intervals to ensure no hazards exist (COTR, Contractor, Inspector).	25.1 During construction, at least once per week	Geology and Soils
26 Contact BPA geotechnical specialists, if geotechnical issues, such as new landslides, arise during construction.	26.1 Report any geotechnical issues, such as new landslides, immediately (COTR, Contractor). 26.2 Develop and implement mitigation response to address potential impacts (PM, GE, ES-KEP, Contractor).	26.1 Within 24 hours 26.2 During construction, within 48 hours of identifying the need for mitigation	Geology and Soils

[1] Finding suitable locations for wash stations in all work areas is not possible due to the presence of wetlands, waterways and steep topography. If wash stations could not be situated along each access road leading to work areas, equipment would be washed prior to entering work areas and as soon as possible after leaving work areas, at the nearest wash station location.

Mitigation Measure	Components of Mitigation Measure (Person(s) Responsible for Implementation)	Schedule (Time of Implementation)	Applicable Resource(s)
27 Delineate construction limits within 200 feet of streams, other waterbodies, wetlands, and floodplains; manage sediment as specified in the SWPP Plan, with an approved method that meets the *Stormwater Management Manual for Western Washington* (Washington State Department of Ecology 2005) erosion and stormwater control best management practices, to eliminate sediment discharge into waterways and wetlands, minimize the size of construction disturbance areas, and minimize removal of vegetation, to the greatest extent possible.	27.1 Create a site-specific Erosion and Sediment Control (ESC) Plan (that is reviewed and approved by BPA) as part of the SWPP Plan, where required, to prevent impacts on waterways and wetlands (Contractor, ES-KEP, COTR). 27.2 Place flagging, stacking, or fencing to identify streams, other waterbodies, wetlands, and floodplains within 200 feet of construction areas (Contractor). 27.3 Minimize vegetation removal in riparian areas (Contractor). 27.4 Conduct off-site riparian plantings along four streams that are temperature-impaired according to DEQ to improve fish habitat (ES-KEC).	27.1 Prior to construction 27.2 Prior to construction 26.3 During and after construction 26.4 During and after construction	Geology and Soils, Waterways and Water Quality, Wetlands, Floodplains, Wildlife

Mitigation Measure	Components of Mitigation Measure (Person(s) Responsible for Implementation)	Schedule (Time of Implementation)	Applicable Resource(s)
28 Inspect erosion and sediment controls weekly, maintain them as needed to ensure their continued effectiveness, and remove them from the site when vegetation is re-established and the site has been stabilized.	28.1 Inspect all on-site erosion and sediment control measures in accordance with the SWPP Plan (COTR, Contractor, ES-KEP). 28.2 Repair damaged or inadequate erosion and sediment control measures in accordance with the SWPP Plan (COTR, Contractor). 28.3 Once sites are stabilized and BPA has conducted a final inspection, remove and dispose of any materials used as temporary erosion and sediment control devices (ES-KEP, COTR, Contractor).	28.1 During construction 28.2 During and post construction 28.3 Post construction, once the site is stabilized	Geology and Soils, Waterways and Water Quality, Floodplains
29 Design and construct access roads to minimize drainage from the road surface directly into surface waters, size new and replacement culverts large enough to accommodate predicted flows, and size and space cross drains and water bars properly to accommodate flows and direct sediment-laden waters into vegetated areas.	29.1 During road design, follow the guidelines for spacing and sizing of water structures in section 3 of the *Washington Forest Practices Board Manual* (Washington Department of Natural Resources 2000) (RE). 29.2 Prior to constructing water structures, verify in the field that their location and spacing are adequate to minimize drainage from the road surface directly into water features, including wetlands (COTR, RE, Contractor).	29.1 Completed during design phase 29.2 Prior to constructing water features	Geology and Soils, Waterways and Water Quality

Mitigation Measure	Components of Mitigation Measure (Person(s) Responsible for Implementation)	Schedule (Time of Implementation)	Applicable Resource(s)
30 Inspect and maintain access roads, culverts, and other facilities after construction to ensure proper function and nominal erosion levels.	30.1 Conduct post-construction monitoring of access roads, culverts, and other facilities to identify any areas that are not functioning properly for repair work (COTR, ES-KEP). 30.2 Inspect roads and culverts on an annual basis, and maintain them on an as-needed basis (BPA Eugene District).	30.1 Within 1 month of the end of the construction activities and again in the spring of 2012 30.2 Post construction at least once per year	Geology and Soils, Waterways and Water Quality, Floodplains
31 Minimize disturbance to wetlands and wetland buffers by reducing structure construction work areas in or near wetlands to approximately 50 feet by 50 feet per structure (approximately 0.06 acre), if possible, and install signage, fences, or flagging, where needed, to restrict vehicles and equipment to designated routes.	31.1 Depict wetland boundaries and streams on project maps used by BPA and Contractors (ES-KEP). 31.2 Place flagging, staking, or fencing to identify streams, other waterbodies, wetlands, and floodplains within 200 feet of construction areas (Contractor). 31.3 Minimize construction work areas near wetlands, while ensuring safe work conditions (ES-KEP, COTR, Contractor).	31.1 When maps are developed, prior to construction 31.2 Prior to construction 31.3 Prior to construction	Vegetation, Waterways and Water Quality, Wetlands
32 Identify known western lily populations, including a 25-foot buffer, as sensitive areas in construction documents and maps used by Contractors.	32.1 Depict areas of known western lily populations and 25-foot buffers around these populations as sensitive areas on Contractor maps (ES-KEP, ES-KEC).	32.1 Prior to construction	Vegetation

Mitigation Measure	Components of Mitigation Measure (Person(s) Responsible for Implementation)	Schedule (Time of Implementation)	Applicable Resource(s)
33 Install protective fencing around identified western lily sensitive areas before construction activities begin in that area and place “sensitive area” signage on or near fencing around western lily population indicating where construction activities are prohibited.	33.1 Install protective fencing 25 feet from identified western lily sensitive areas (ES-KEP, COTR, Contractor).	33.1 Prior to construction	Vegetation
34 Remove encroaching woody vegetation species and noxious weeds in the two western lily sensitive areas using a variety of manual weed control methods and spread any vegetation removed within the vicinity of western lily sensitive areas, including wood chips, sawdust, branches, and woody debris, outside of the 25-foot buffer surrounding western lily plants.	34.1 Remove weeds and encroaching woody vegetation in the two known western lily areas using manual weed control methods (ES-KEC).	34.1 Late fall or winter 2011 to 2012	Vegetation

Mitigation Measure	Components of Mitigation Measure (Person(s) Responsible for Implementation)	Schedule (Time of Implementation)	Applicable Resource(s)
35 Develop a Weed Management Plan for Rebuild Project implementation that includes baseline information on known weed occurrences; specific actions that will be taken to minimize spread and control infestations including construction BMPs, control actions (chemical, cultural, biological, and physical methods) both preconstruction and post-construction; and actions that would be taken to monitor the spread of weeds into the project vicinity for at least 3 years after project implementation. The Weed Management Plan is presented in Appendix D.	35.1 Develop a Weed Management Plan using baseline weed occurrence information and submit to county and state weed specialists for recommendations (ES-KEC, BPA Eugene District, FOR). 35.2 Provide a copy of the baseline weed surveys to the Contractor, which includes maps identifying existing weed occurrences (ES-KEP). 35.3 Implement weed control mitigation measures as described in the Weed Management Plan (COTR, Contractor, FOR, ES-KEP, BPA Eugene District).	35.1 Completed and BPA requested comments from Oregon Department of Agriculture and county weed boards 35.2 Prior to, during, and post construction 35.3 During construction	Vegetation
36 Survey the right-of-way for weed occurrence in fall 2010, mapping locations and estimating density of weed species. (Complete)	36.1 Complete a weed survey, map results, and draft a report (FOR).	36.1 Completed in the fall of 2010	Vegetation

Mitigation Measure	Components of Mitigation Measure (Person(s) Responsible for Implementation)	Schedule (Time of Implementation)	Applicable Resource(s)
37 Survey Rebuild Project access roads for weed occurrence in spring 2011 and implement appropriate type and level of weed control for weed species that respond to spring or summer treatment during the survey or shortly thereafter.	37.1 Conduct weed surveys in the spring of 2011 (FOR). 37.2 Implement appropriate weed control to help reduce risk of spreading noxious weeds during construction, as described in the Weed Management Plan (FOR, BPA Eugene District).	37.1 Spring 2011 37.2 Prior to and during construction	Vegetation
38 Control weeds prior to construction, with a focus on species with small, contained infestations to reduce the potential for widespread establishment and the need for long-term management; weed species identified as occurring in discrete occurrences with the ability to radiate from this focal point include Spanish heath, English ivy, and pampas grass.	38.1 Conduct weed surveys in the spring of 2011 (FOR). 38.2 Implement appropriate weed control to help reduce risk of spreading noxious weeds during construction (FOR).	38.1 Spring 2011 38.2 Prior to and during construction	Vegetation
39 Use local sources of rock for road construction and obtain road fill materials from weed-free quarries.	39.1 Only use weed-free road materials for construction (RE, COTR, Contractor). 39.2 Include a requirement in construction specifications for the Contractor to use local sources of rock for road construction (RE, COTR).	39.1 Prior to and during construction 39.2 Prior to construction	Vegetation, Greenhouse Gases

Mitigation Measure	Components of Mitigation Measure (Person(s) Responsible for Implementation)	Schedule (Time of Implementation)	Applicable Resource(s)
40 Conduct weed control in riparian areas using procedures that prevent the introduction of toxic herbicides into aquatic areas, and use herbicides approved for use near aquatic areas.	40.1 Conduct weed control in riparian areas using procedures to prevent introduction of herbicides into aquatic areas and using herbicides approved for use near aquatic areas (COTR). 40.2 Follow the Weed Management Plan protocol for weed control in and near riparian areas to ensure herbicides do not enter aquatic areas (COTR).	40.1 During construction 40.2 During construction	Vegetation, Fish
41 Restrict construction activities to the area needed to work effectively in order to limit disturbance of native plant communities to the minimum amount necessary to prevent spread of weed species.	41.1 Minimize disturbance to existing vegetation to prevent the colonization of weed species in disturbed areas (COTR, Contractor).	41.1 During construction	Vegetation, Wildlife

Mitigation Measure	Components of Mitigation Measure (Person(s) Responsible for Implementation)	Schedule (Time of Implementation)	Applicable Resource(s)
42 Reseed disturbed areas after construction and regrading are complete, at the appropriate time period for germination, with a native seed mix, a seed mix recommended by ODFW, or a seed mix identified in the *Stormwater Management Manual for Western Washington* (Washington State Department of Ecology 2005), or as agreed upon with landowners for use on their property.	42.1 Identify appropriate seed mix to be used in each area and ensure appropriate seed mix is used for revegetation (ES-KEP, COTR, Eugene District, CLS). 42.2 Seed disturbed areas during the appropriate time period (Contractor).	42.1 Prior to construction 42.2 When adequate moisture for germination is available	Land Use and Recreation, Visual Quality, Geology and Soils, Waterways and Water Quality, Vegetation, Floodplains, Wildlife
43 Monitor seed germination of seeded areas with at least three field visits per year until site stabilization (defined as at least 70% cover by native or acceptable nonnative species) is achieved; if vegetative cover is inadequate, implement contingency measures and reseed to ensure adequate revegetation of disturbed soils.	43.1 Monitor seed germination at least three times until the site has stabilized (ES-KEP, COTR, Contractor). 43.2 Inspect revegetated sites to determine if stabilization has occurred in accordance with the SWPP Plan (ES-KEP, COTR, Contractor). 43.3 If vegetative cover is inadequate, implement contingency measures (ES-KEP, COTR).	43.1 During and post construction, as needed 43.2 Per the inspection schedule in the SWPP Plan, which mandates inspection on a regular basis until final stabilization is achieved 43.3 Post construction, as needed	Land Use and Recreation, Geology and Soils, Vegetation, Waterways and Water Quality, Floodplains, Wildlife

Mitigation Measure	Components of Mitigation Measure (Person(s) Responsible for Implementation)	Schedule (Time of Implementation)	Applicable Resource(s)
44 Conduct a post-construction weed survey, 1 year after construction, of all areas disturbed by construction activities to determine if there are new weed infestations; implement appropriate control measures of weed infestations.	44.1 Conduct post-construction weed surveys of all areas disturbed during construction to determine if new areas of weed infestations have occurred (FOR). 44.2 Determine what weed control measures are needed and implement control measures (ES, BPA Eugene District). 44.3 Continue to monitor the right-of-way for new invasions or expansion of the existing weed populations, solicit information from Weed Control Boards, and develop and implement control measures, if needed (BPA Eugene District).	44.1 1 year after construction is complete 44.2 Post construction 44.3 Post construction for at least 3 years	Vegetation

Mitigation Measure	Components of Mitigation Measure (Person(s) Responsible for Implementation)	Schedule (Time of Implementation)	Applicable Resource(s)
45 Implement a Spill Prevention and Treatment Plan (Spill Plan) that requires storage of fuel and other potential pollutants in a secure location at least 150 feet from streams, waterbodies, and wetlands; that ensures that spill containment and cleanup materials are readily available on site and restocked within 24 hours, if used, and that ensures that, in the event of a spill, Contractors are trained to immediately contain the spill, eliminate the source, and deploy appropriate measures to clean and dispose of spilled materials in accordance with federal, state, and local regulations.	45.1 As part of the SWPP Plan, prepare a Spill Plan to address petroleum and hazardous materials handling and management procedures; the Spill Plan will specify the spill response, cleanup, and disposal requirements of oil (ES-KEP, Contractor). 45.2 Ensure clean up materials are stocked and replenished after use (COTR, Contractor). 45.3 Ensure that the provisions within the Spill Plan are followed during construction, including that Contractors are trained to immediately contain spills, and deploy appropriate measures to clean up and dispose of spilled materials in accordance with all applicable regulations (COTR).	45.1 Prior to construction 45.2 During construction and within 24 hours of any spill incident 45.3 During construction	Waterways and Water Quality, Wetlands

Mitigation Measure	Components of Mitigation Measure (Person(s) Responsible for Implementation)	Schedule (Time of Implementation)	Applicable Resource(s)
46 Restrict refueling and servicing operations to locations where any spilled material cannot enter natural or human-made drainage conveyances (e.g., ditches, catch basins, ponds, wetlands, streams, and pipes), at least 150 feet from streams, waterbodies, and wetlands; use pumps, funnels, absorbent pads, and drip pans when fueling or servicing vehicles.	46.1 Restrict refueling to areas at least 150 feet from streams, waterbodies, and wetlands (COTR, Contractor). 46.2 Use pumps, funnels, absorbent pads, and drip pans when fueling or servicing vehicles at least 150 feet from streams, waterbodies, and wetlands (COTR, Contractor).	46.1 During construction 46.2 During construction	Waterways and Water Quality, Wetlands
47 Store, fuel, and maintain vehicles and equipment in designated vehicle staging areas located a minimum of 150 feet away from stream, waterbodies, and wetlands.	47.1 Restrict refueling to areas at least 150 feet from streams, waterbodies, and wetlands (COTR, Contractor). 47.2 Use pumps, funnels, absorbent pads, and drip pans when fueling or servicing vehicles (COTR, Contractor).	47.1 During construction 47.2 During construction	Waterways and Water Quality, Wetlands

Mitigation Measure	Components of Mitigation Measure (Person(s) Responsible for Implementation)	Schedule (Time of Implementation)	Applicable Resource(s)
48 Power wash all vehicles and equipment at an approved cleaning facility prior to entering construction work areas to remove any residual sediment, petroleum, or other contaminants; inspect equipment and tanks on a weekly basis for drips or leaks and promptly make necessary repairs.	48.1 Ensure appropriate location of wash stations for vehicles and equipment entering work areas; discharge from the vehicle wash stations may not enter any stream, waterbody, or wetland (COTR, Contractor). 48.2 Check tanks and equipment containing oil, fuel, or chemicals regularly for drips or leaks and maintain them to prevent spills onto the ground or into state waters (Contractor, COTR).	48.1 During construction 48.2 During construction	Waterways and Water Quality
49 Check all equipment used for instream work for leaks and, prior to entering waterways, completely clean off any external petroleum products, hydraulic fluid, coolants, and other pollutants.	49.1 Check all equipment used for instream work to ensure no contaminants enter waterbodies (Contractor, COTR). 49.2 Wash all equipment used for instream work prior to starting work (Contractor, COTR).	49.1 Prior to construction 49.2 During construction	Waterways and Water Quality
50 Prohibit sidecasting of road grading materials along roads within 300 feet of perennial streams.	50.1 Depict waterways on project maps for Contractor use (ES-KEP). 50.2 Ensure material is not sidecast during road grading within 300 feet of waterways (COTR, RE, Contractor).	50.1 When contractor maps are developed, prior to construction 50.2 During construction	Waterways and Water Quality

Mitigation Measure	Components of Mitigation Measure (Person(s) Responsible for Implementation)	Schedule (Time of Implementation)	Applicable Resource(s)
51 Locate tensioning sites at least 200 feet away from surface waters, including wetlands, and outside of 100-year floodplains, if possible.	51.1 Depict waterways, wetlands, and the boundaries of the 100-year floodplains on project maps for Contractor use (ES-KEP). 51.2 Contractor will obtain BPA approval for each tensioning site location (COTR, Contractor).	51.1 When contractor maps are developed, prior to construction 51.2 During construction	Waterways and Water Quality, Wetlands, Floodplains
52 Conduct construction work within wetlands in accordance with applicable permits.	52.1 During preconstruction meeting, review wetland permit requirements with Contractor (ES-KEP, COTR, Contractor). 52.2 Ensure that vehicles or construction equipment do not enter into wetland and streams, except as authorized by permits (COTR)	52.1 Prior to construction 52.2 During construction	Wetlands
53 Avoid deposit of excavated material into wetlands during structure construction, or remove all excavated material from the wetland, except as allowed by permit, and stabilize the removed fill in an upland area.	53.1 Follow mitigation measures included in the Section 404 Joint Permit Application submitted to the U.S. Army Corps of Engineers, including removing any material excavated, minimizing work areas, and revegetation of disturbed wetland areas (ES). 53.2 Ensure that all Section 404 permit requirements are followed by the Contractor and that removed fill is stabilized in upland areas (COTR, Contractor).	53.1 Completed in submitted permit application 53.2 During construction	Wetlands

Mitigation Measure	Components of Mitigation Measure (Person(s) Responsible for Implementation)	Schedule (Time of Implementation)	Applicable Resource(s)
54 Revegetate disturbed areas in wetlands and wetland buffers following specific revegetation guidelines in permits; use native species for revegetation in wetlands that are not in agricultural areas, and reseed pastures with an appropriate seed mix.	54.1 Revegetate disturbed areas in wetlands and wetland buffers in compliance with permits using the appropriate seed mix (COTR, Contractor).	54.1 During and post construction	Wetlands
55 Implement mitigation measures for all work conducted in or near coho salmon and Chinook salmon habitat, as agreed upon in consultation with NMFS.	55.1 Ensure the conservation measures in the EFH Assessment and Biological Opinion are followed (EP-KEP, COTR, Contractor).	55.1 During construction	Fish
56 Install spiral bird diverters on conductors spanning areas identified as bird flyways, including wide floodplains and some waterways that intersect the transmission line corridor, to decrease the potential for avian (bird) collisions.	56.1 Identify locations along the transmission line where spiral bird diverters should be installed (ES-KEC). 56.2 Install spiral bird diverters on conductors as needed (COTR, ES-KEP, Contractor).	56.1 Completed during design phase 56.2 During construction	Wildlife

Mitigation Measure	Components of Mitigation Measure (Person(s) Responsible for Implementation)	Schedule (Time of Implementation)	Applicable Resource(s)
57 Cut danger trees in the Johnson Creek floodplain without disturbing tree roots.	57.1 Leave roots of the danger trees intact to minimize erosion (COTR, FOR, Contractor).	57.1 During construction	Floodplains, Waterways and Water Quality
58 Implement timing restrictions on construction work and danger tree removal conducted near and within suitable marbled murrelet and northern spotted owl habitat, as agreed upon in consultation with the U.S. Fish and Wildlife Service (USFWS).	58.1 Provide Contractors with a list of areas where construction timing restrictions apply as agreed upon in consultation with USFWS (ES-KEP, FOR). 58.2 During a preconstruction meeting, review locations of restricted area and timing of noise restrictions with Contractor (ES-KEP, COTR, Contractor). 58.3 Ensure that the Contractor follows timing restrictions (COTR).	58.1 Prior to construction 58.2 Prior to construction 58.3 During construction	Wildlife
59 Conduct removal of danger trees after August 15, except in or near suitable marbled murrelet and northern spotted owl habitat, where tree removal would not be conducted until after September 15.	59.1 Identify timing instructions in contract with tree removal contractor (FOR). 59.2 Ensure that the tree removal contractor follows timing restrictions (FOR).	59.1 Prior to construction 59.2 During construction	Wildlife

Mitigation Measure	Components of Mitigation Measure (Person(s) Responsible for Implementation)	Schedule (Time of Implementation)	Applicable Resource(s)
60 Prepare a mitigation plan for unavoidable adverse impacts on resources eligible for listing under the National Register of Historic Places (NRHP) in consultation with the State Historic Preservation Officer (SHPO) and affected tribes.	60.1 Work with the SHPO and affected tribes during consultation under Section 106 to develop a mitigation plan for the treatment of unavoidable adverse impacts on resources eligible for listing under the NRHP (ES-KEC, ARCH, RE, PM). 60.2 Ensure mitigation is implemented during construction as appropriate (COTR, ARCH, ES-KEP, Contractor).	60.1 Prior to construction 60.2 Prior to, during, and possibly post construction	Cultural Resources
61 Limit access road work within cultural resource sites to the existing roadbed, and confine the work to applying new material on top of existing material, where possible.	61.1 Identify cultural resource sites as sensitive areas on contractor maps (ARCH, ES-KEP). 61.2 Ensure mitigation is implemented during construction as appropriate (COTR, ARCH, ES-KEP, Contractor).	61.1 Prior to construction 61.2 During construction	Cultural Resources

Mitigation Measure	Components of Mitigation Measure (Person(s) Responsible for Implementation)	Schedule (Time of Implementation)	Applicable Resource(s)
62 Implement an Inadvertent Discovery Plan that details crew member responsibilities for reporting in the event of a discovery during construction; require work to stop immediately and notification of local law enforcement officials (as required), appropriate BPA personnel, the SHPO, and affected tribes if cultural resources, either archaeological or historical materials, or human remains are discovered during construction activities.	62.1 Develop an Inadvertent Discovery Plan to satisfy requirements as agreed upon during consultation with the SHPO, including notification protocol (ARCH).	62.1 Prior to construction	Cultural Resources
63 Ensure that cultural resource monitors are present during construction work near known prehistoric sites.	63.1 During preconstruction meeting, review the role of cultural monitors and how coordination with them will occur (ES-KEP, ARCH, COTR, Contractor). 63.2 Ensure cultural resource monitors are present during construction, where required (COTR, ARCH, Contractor).	63.1 Prior to construction 63.2 During construction	Cultural Resources
64 Locate construction equipment as far away from noise-sensitive uses as possible.	64.1 Locate construction equipment as far as possible from residences, where possible (COTR, Contractor).	64.1 Prior to construction	Noise

Mitigation Measure	Components of Mitigation Measure (Person(s) Responsible for Implementation)	Schedule (Time of Implementation)	Applicable Resource(s)
65 Require sound control devices on all construction equipment powered by gasoline or diesel engines that are at least as effective as those originally provided by the manufacturer.	65.1 Require that sound control devices on all construction equipment be at least as effective as the manufacture's in construction specifications (CSW). 65.2 Periodically check equipment to ensure sound control devices are installed and working properly and that all equipment is operated and maintained to minimize noise (COTR).	65.1 Prior to construction 65.2 During construction	Noise
66 Operate and maintain all construction equipment to minimize noise generation.	66.1 Require that sound control devices on all construction equipment be at least as effective as the manufacture's in construction specifications (COTR). 66.2 Periodically check equipment to ensure sound control devices are installed and working properly and that all equipment is operated and maintained to minimize noise (COTR).	66.1 During construction 66.2 During construction	Noise
67 Design, construct, and operate the new transmission line to meet the National Electrical Safety Code (NESC).	67.1 Design the transmission line to meet or exceed NESC standards (DE, PM). 67.2 Operate and maintain the transmission line to meet NESC standards (BPA Eugene District).	67.1 Completed during design phase 67.2 Post construction, during operation	Public Health and Safety

Mitigation Measure	Components of Mitigation Measure (Person(s) Responsible for Implementation)	Schedule (Time of Implementation)	Applicable Resource(s)
68 Prepare a site-specific Safety Plan (Safety Plan) in compliance with state requirements before starting construction; specify how to manage hazardous materials, such as fuel and any toxic materials found in work sites; include a Fire Prevention and Suppression Plan, and detail how to respond to emergency situations; keep the Safety Plan on site during construction and maintain and update, as needed.	68.1 Prepare a Safety Plan in compliance with BPA requirements that includes how to manage hazardous materials and how to respond in emergency situations, including a Fire Prevention and Suppression Plan (Contractor). 68.2 Review the Safety Plan prepared by the Contractor and provide feedback and request changes if needed (ES, COTR). 68.3 Keep the Safety Plan on site and make sure it is easily accessible (COTR, Contractors). 68.4 Ensure that Contractor maintains the Safety Plan on a regular basis and as needed (COTR).	68.1 Prior to construction 68.2 Prior to construction 68.3 Prior to construction 68.4 At a minimum, at each monthly meeting and after any incident requiring plan upgrades	Public Health and Safety
69 Require the Contractor to hold safety meetings with workers at the start of each work week to review potential safety issues and concerns.	69.1 Conduct weekly safety meetings in accordance with construction specifications (Contractor, COTR). 69.2 Obtain schedule of where and when crew safety meetings occur and attend as needed (Contractor, COTR).	69.1 Prior to and during construction 69.2 During construction; BPA personnel will attend a minimum of one meeting per month	Public Health and Safety
70 Require monthly meetings, attended by the Contractor and BPA staff, to discuss safety issues.	70.1 Schedule and attend monthly meetings with BPA and Contractor (COTR, Contractor).	70.1 During construction on a monthly basis, at a minimum	Public Health and Safety

Mitigation Measure	Components of Mitigation Measure (Person(s) Responsible for Implementation)	Schedule (Time of Implementation)	Applicable Resource(s)
71 Secure the work area at the end of each workday, as much as possible, to protect the general public and to safeguard equipment.	71.1 Require that steps are taken to identify and correct safety hazards on work sites each day (COTR).	71.1 During construction	Public Health and Safety
72 Install temporary guard structures (wood-pole structures) over local utility lines and county roads, where needed, to ensure continued service and safe passage when the conductor line is replaced, or, if guard structures are not used along some county roadways, employ flaggers to ensure safe passage.	72.1 Identify locations where temporary guard structures are needed during conductor stringing (ES-KEP, COTR, Contractor). 72.2 Ensure guard structures are installed where needed or that flaggers are in place at locations where guard structures are not used (COTR).	72.1 During construction 72.2 During construction	Public Health and Safety
73 Ground fences and other metal structures on and near the right-of-way during construction to limit the potential for nuisance shocks.	73.1 Require that fences and other metal structures are grounded during construction on and near the right-of-way, as appropriate (COTR).	73.1 During construction	Public Health and Safety
74 Set a speed limit for construction vehicles on unpaved access roads of no greater than 15 miles per hour to minimize dust.	74.1 Perform work in a manner that minimizes the production of dust in accordance with the SWPP Plan, which includes limiting vehicle speeds along dirt roads to 15 miles per hour (COTR, Contractor).	74.1 During construction	Air Quality

Mitigation Measure	Components of Mitigation Measure (Person(s) Responsible for Implementation)	Schedule (Time of Implementation)	Applicable Resource(s)
75 Ensure that all vehicle engines are maintained in good operating condition to minimize exhaust emissions.	75.1 Visually check the operation of exhaust systems on construction equipment to ensure they are in good operating condition and do not have obviously excessive exhaust emissions (COTR).	75.1 During construction, on a regular basis	Air Quality
76 Implement vehicle idling and equipment emissions measures.	76.1 Require that Contractor observe vehicle idling and equipment emissions measures in construction specifications (COTR).	76.1 During construction	Greenhouse Gases
77 Encourage carpooling and the use of shuttle vans among construction workers to minimize construction-related traffic and associated emissions.	77.1 Encourage Contractor use of carpooling and shuttle vans to transport workers when possible (COTR).	77.1 Prior to construction	Greenhouse Gases
78 Locate staging areas as close to construction sites as practicable to minimize driving distances between staging areas and construction sites.	78.1 Locate staging areas as close to construction areas as possible (Contractor, COTR).	78.1 Prior to construction	Greenhouse Gases
79 Encourage the use of the proper size of equipment for each job.	79.1 Request that the proper size of equipment is used for each job (COTR).	79.1 Prior to and during construction	Greenhouse Gases
80 Use alternative fuels for generators at construction sites, such as propane or solar, or use electrical power, where practicable.	80.1 Request that Contractors consider the use of alternative fuels where practicable (COTR).	80.1 Prior to and during construction	Greenhouse Gases

Mitigation Measure	Components of Mitigation Measure (Person(s) Responsible for Implementation)	Schedule (Time of Implementation)	Applicable Resource(s)
81 Reduce electricity use in the construction office by using compact fluorescent bulbs and turning off computers and other electronic equipment every night, where possible.	81.1 Encourage electricity reduction practices on the construction site, such as the use of compact fluorescent bulbs and turning off computers and other electronic equipment each night (COTR).	81.1 During construction	Greenhouse Gases
82 Recycle or salvage nonhazardous construction and demolition debris, where practicable.	82.1 Encourage the Contractor to recycle and salvage hazardous construction and demolition debris, where feasible (COTR).	82.1 Prior to and during construction	Greenhouse Gases
83 Dispose of wood poles in the local area, where practicable.	83.1 Ensure wood poles are disposed of in an appropriate location or facility (COTR, Contractor).	83.1 During construction	Greenhouse Gases

References

Washington State Department of Ecology. 2005. *Stormwater Management Manual for Western Washington*. Publication #05-10-029 to #05-10-033. February.

Washington Department of Natural Resources. 2000. *Washington Forest Practices Board Manual*. Available: <http://www.dnr.wa.gov/BusinessPermits/Topics/ForestPracticesRules/Pages/fp_board_manual.aspx>.

BONNEVILLE POWER ADMINISTRATION
DOE/BP-4294 ▪ May 2011